PUMP, VARIABLE DELIVERY
PVG 100 & 130 (F1U)

"P-1NN/F" CONTROL

ENGINEERING | 1

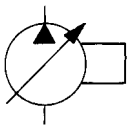

Installation Drawing **Single Pressure Compensator Control w/Load Sense**

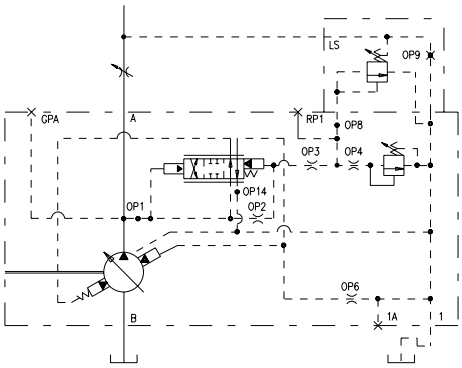

HYDRAULIC CIRCUIT

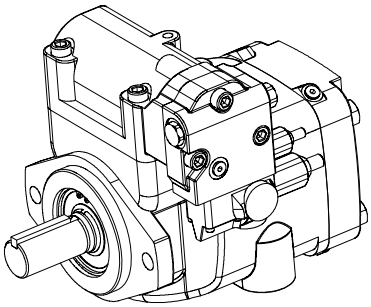

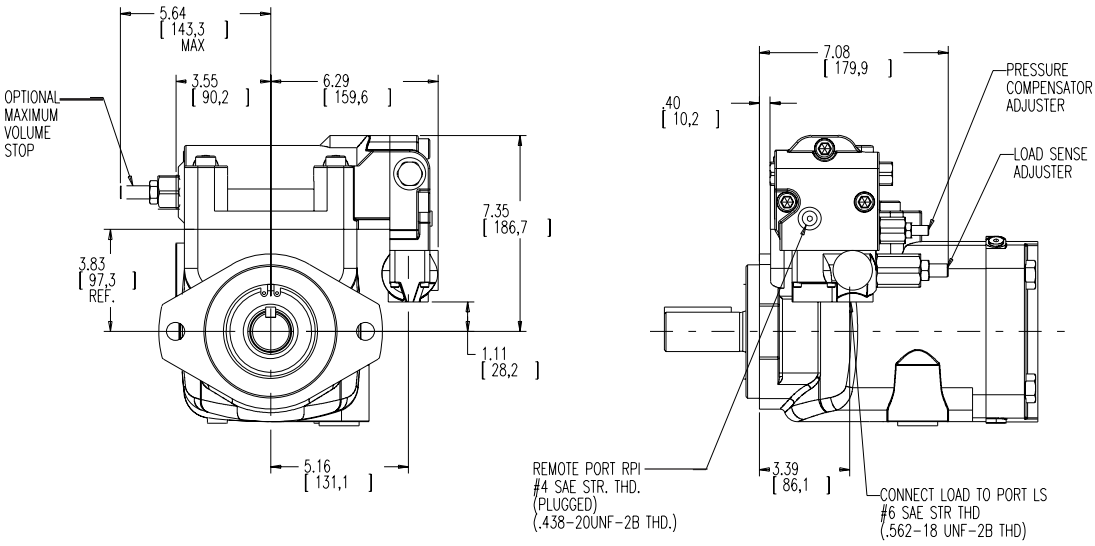

516152-208

FOR BASIC PUMP DIMENSIONS
SEE PLANOGRAPHS:
DS-47942 DS-47943 DS-47944

Telephone: (414) 327-1700
Fax: (414) 327-0532

OILGEAR
2300 So. 51st. Street
Milwaukee, WI USA 53219

Reissued: April, 2008
DS-47542-D