Oilgear

PUMP, VARIABLE DELIVERY
PVG 150

"P-2" CONTROL

ENGINEERING | **1**

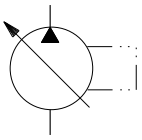

INSTALLATION DRAWING **Dual Pressure Compensator Control**

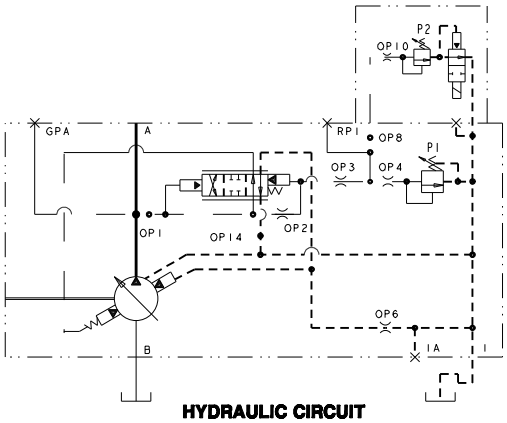

HYDRAULIC CIRCUIT

NOTES:

1. PUMPS DESIGNED FOR ONE-WAY SERVICE AND ARE DIMENSIONED AS SHOWN.
2. THESE UNITS ARE DESIGNED TO RUN CASE FULL OF FLUID AT ALL TIMES. FILL CASE BEFORE STARTING AND CONNECT DRAIN LINES ACCORDINGLY.
3. NUMERICAL DIMENSIONS GIVEN IN INCHES/[MM].
4. NET WEIGHT- 173 LBS [79 KG] FOR VERSION SHOWN
   186 LBS [85 KG] FOR THRU SHAFT VERSION.

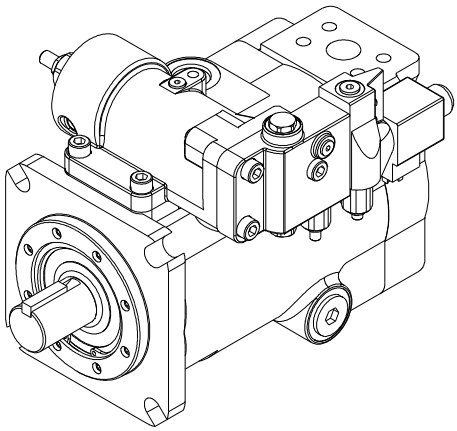

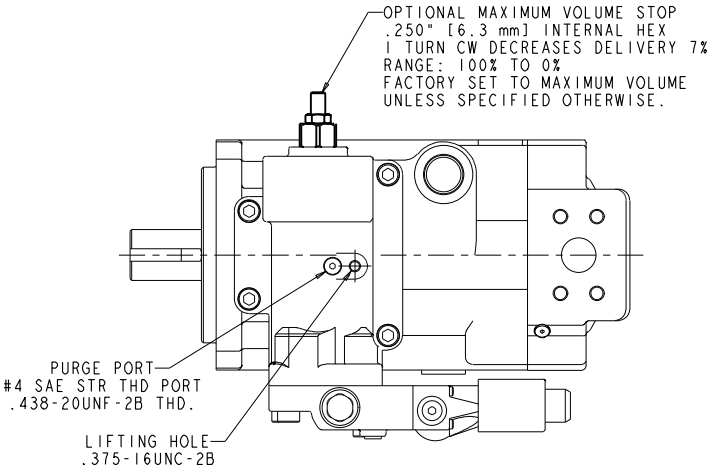

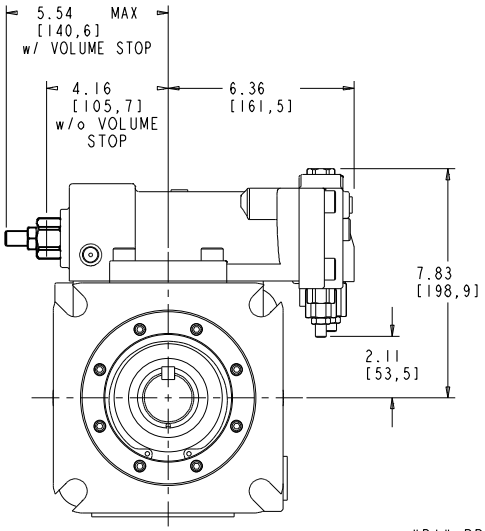

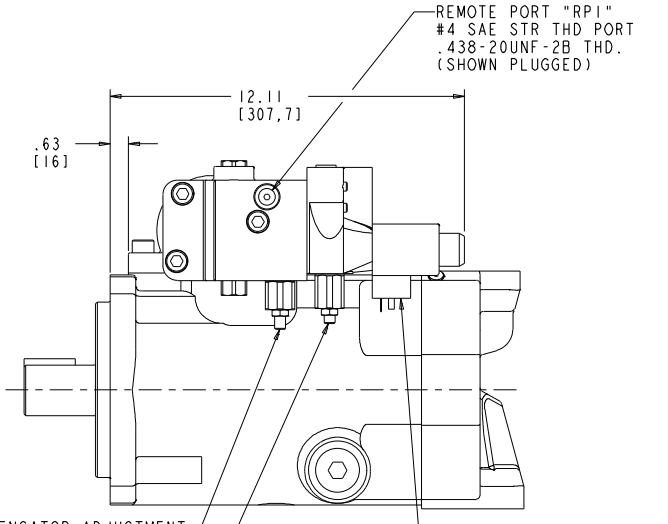

"P1" PRESSURE COMPENSATOR ADJUSTMENT
.188" [4.8 mm] INTERNAL HEX
1 TURN CW INCREASES PRESSURE SETTING 1000 PSI.
RANGE: 300 TO 5000 PSI

"P2" PRESSURE COMPENSATOR ADJUSTMENT
.188" [4.8 mm] INTERNAL HEX
1 TURN CW INCREASES PRESSURE SETTING 1000 PSI.
RANGE: 350 TO 5000 PSI

DIN 43650A CONNECTOR
ENERGIZE COIL TO
ACTIVATE "P1" PRESSURE
SETTING

FOR BASIC PUMP DIMENSIONS SEE PLANOGRAPHS:
DS-47375, DS-47376

520241-108

Telephone: (414) 327-1700
Fax: (414) 327-0532

OILGEAR
2300 So. 51st Street
Milwaukee, WI USA 53219

Issued: November, 2009

DS-47381