SERVICE INSTRUCTIONS "P-1NN/F" SINGLE PRESSURE COMPENSATOR WITH LOAD SENSE FOR PVG-150 PUMP, A1 SERIES CONTROL

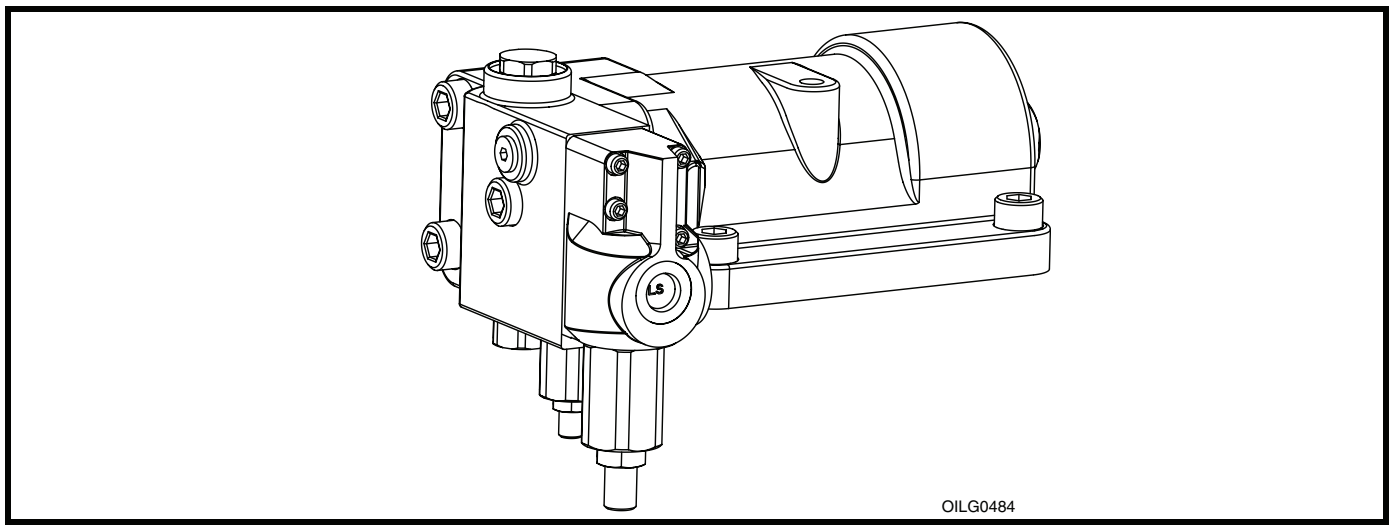

Figure 1. Typical Oilgear Type "P-1NN/F" Single Pressure Compensator w/Load Sense Control for PVG-150 Pumps

PURPOSE OF INSTRUCTIONS

These instructions will simplify the installation, operation, troubleshooting and maintenance of Oilgear type "P-1NN/F" Single Pressure Compensator w/Load Sense controlled units.

This material will inform you about the basic construction, principle of operation and service parts listings. Some controls may be modified for specific applications from those described in this bulletin and other changes may be made without notice.

REFERENCE MATERIAL

Fluid Recommendations .....Bulletin 90000
Contamination Evaluation Guide.....Bulletin 90004
Filtration Recommendations .....Bulletin 90007
Piping Information .....Bulletin 90011
Installation of Vertically Mounted Axial Piston Units .....Bulletin 90014
PVG Pumps -150 Service Instructions.....Bulletin 947034
PVG Open Loop Pumps, Sales .....Bulletin 47019-J

PVG-150 PUMP INSTALLATIONS

Single Pressure Compensator w/Load Sense "P-1NN/F," Installation..... Data Sheet 47378
Basic Pump, Installation..... Data Sheet 47375
Through Shaft Basic Pump, Installation..... Data Sheet 47376
Gear Pump, Installation..... Data Sheet 47945
Dual Pump 2-Bolt SAE Adapters, Installation..... Data Sheet 47387
Dual Pump 4-Bolt SAE Adapters, Installation..... Data Sheet 47388

THE OILGEAR COMPANY
2300 South 51st Street
Milwaukee, Wisconsin 53219
www.oilgear.com

Read and understand this entire instruction sheet before repairing or adjusting your Oilgear product.

Those who use and maintain this equipment must be thoroughly trained and familiar with the product. If incorrectly used or maintained, this product and its equipment can cause severe injury.

SAFETY SYMBOLS

The following signal words are used in this instruction sheet to identify areas of concern where your safety may be involved. Carefully read the text and observe any instructions provided to ensure your safety.

⚠ DANGER ⚠

THIS SIGNAL WORD INDICATES AN IMMINENTLY HAZARDOUS SITUATION WHICH, IF NOT AVOIDED, WILL RESULT IN DEATH OR SERIOUS INJURY.

⚠ WARNING

This signal word indicates a potentially hazardous situation which, if not avoided, could result in death or serious injury.

CAUTION

This signal word indicates that a potentially hazardous situation exists which, if not avoided, may result in damage to equipment or minor personal injury.

NOTE *While not directly relevant to the topic being discussed, the NOTE is used to emphasize information provided, or provide additional information which may be of benefit.*

⚠ WARNING

This service information is designed for the maintenance of your Oilgear product. It contains the information on the correct procedures determined by Oilgear for the safe manner of servicing. Always keep this instruction sheet in a location where it is readily available for the persons who use and maintain the product. Additional copies of this instruction sheet are available through Oilgear. Contact us at 414-327-1700 or visit our website: www.oilgear.com. Please contact us if you have any questions regarding the information in this instruction bulletin.

NOTE *The cleanliness of working on this pump control or the hydraulic system is extremely important to the safety and reliability of the pump and the system. Always make sure the fittings are clean on the outside before removing them from their connections, are capped and plugged when removed, and are placed in a clean rag or container until they are reinstalled.*

⚠ WARNING

Some service operations may require special tools or equipment. If you require information on these items, please contact Oilgear before attempting these repairs and service operations.

⚠ WARNING

Read, understand and follow the safety guidelines, dangers and warnings contained in this instruction sheet to promote reliable operation and prevent serious personal injury.

⚠ WARNING

DO NOT attempt to service this machinery in an environment where safety regulations are not established and in place.

⚠ WARNING

DO NOT operate the hydraulic system if a leak is present. Serious injury may result.

⚠ WARNING

Hydraulic systems operate under very high pressure. Hydraulic fluid escaping from a pressurized system can penetrate unprotected body tissue. DO NOT inspect for hydraulic leaks with bare hands or other exposed body parts. As a minimum, wear leather gloves prior to inspecting for leaks and use cardboard or wood. If leaks are present, relieve pressure and allow system to cool prior to servicing. If injured by escaping hydraulic oil, contact a physician immediately. Serious complications may arise if not treated immediately. If you have questions regarding inspecting for hydraulic leaks, please contact Oilgear prior to servicing.

© 2010 THE OILGEAR COMPANY - ALL RIGHTS RESERVED

⚠ WARNING

Hydraulic hoses and tubing must be inspected on a daily basis for leaks, cuts, abrasions, damage and improper clearance along any mounting frame for hidden damage before the unit is put into service. Replace damaged hoses or hoses you suspect are damaged before the system is returned to service! Hoses must be replaced every 2 years. Failure to properly inspect and maintain the system may result in serious injury.

⚠ WARNING

Hydraulic systems are hot. DO NOT TOUCH! Serious personal injury may result from hot oil. When you have completed working on the hydraulic system, thoroughly clean any spilled oil from the equipment. Do not spill any hydraulic fluids on the ground. Clean any hydraulic fluids from your skin as soon as you have completed maintenance and repairs. Dispose of used oil and system filters as required by law.

⚠ WARNING

Use hoses, fittings and adapters with the correct SAE rating when replacing hoses to prevent possible serious injury. Always replace hoses, fittings and adapters with replacements that have a proper, suitable, working pressure rating. Replacement hoses must be of the correct length and must comply with the hose manufacturer's and Oilgear's installation guidelines and recommendations.

⚠ WARNING

Hydraulic hoses have the SAE ratings marked on the hose to assist you in selecting the correct hose. The same manufacturer must supply any replacement hydraulic hoses and fitting assemblies. As an example: Brand "X" hose and brand "Y" fitting will not normally be compatible. No "Twist" is allowed in the hydraulic hoses. "Twist" may result in premature hose failure. This can cause serious injury. Please contact Oilgear for assistance when required.

⚠ WARNING

Hydraulic cylinders can be holding a function in a certain position when the pump is off. An example of this is a function being held in the lift or partial lift position by the cylinders. If a hydraulic line is removed or the hydraulic circuits or controls are being worked on, gravity may allow the function being held in position to drop. All workers and personnel must remain clear of these areas when working on or operating the hydraulic system. Block and secure all devices and functions which apply before beginning work or operation. Failure to comply with this can result in serious injury or death.

⚠ WARNING

Any hydraulic pipe which is replaced must conform to SAE J1065 specifications. If incorrect hydraulic pipe is installed, the hydraulic system may fail, causing serious injury. Damaged or leaking fittings, pipes or hoses must be replaced before the system is returned to service.

⚠ WARNING

DO NOT heat hydraulic pipe. The carbon content of this steel tube is such that if heated for bending, and either water or air quenched, the pipe may lose its ductility and thereby be subject to failure under high pressure conditions. Serious injury can result. Damaged or leaking pipes must be replaced before the system is returned to service. Please contact Oilgear if you require assistance or have questions.

⚠ WARNING

All hydraulic pressure must be relieved from the hydraulic system prior to removing any components from the system. To relieve the hydraulic pressure from the hydraulic system, turn off the motor and operate the control panel with the key in the ON position. Failure to comply can result in serious injury. If you have any questions concerning relieving the hydraulic pressure from the system, please contact Oilgear.

⚠ WARNING

Hydraulic components can be heavy. Use caution while lifting these components. Serious personal injury can be avoided with proper handling of the components.

⚠ WARNING

Please contact Oilgear if you require assistance. When performing hydraulic test procedures, use the proper hydraulic gauges. Installing an incorrect test gauge could result in serious injury if the gauge fails. Use properly rated hydraulic hoses to allow the test gauge to be read away from moving parts and functions.

⚠ WARNING

Increasing hydraulic pressure beyond the recommendations may result in serious damage to the pump and system or serious personal injury, and may void the Oilgear Warranty. If you have questions concerning hydraulic pressures or testing procedures, please contact Oilgear before attempting the test procedures or making adjustments.

⚠ WARNING

An Oilgear pump or pump control must not be modified in any way without authorization from Oilgear. Modifications may not comply with safety standards, including ANSI safety standards, and may result in serious personal injury. Please contact Oilgear if you require assistance.

⚠ WARNING

DO NOT enter under hydraulic-supported equipment unless it is fully supported or blocked. Failure to follow this procedure can result in serious injury or death.

⚠ WARNING

Any Oilgear pump safety decals must be replaced anytime they are damaged, missing or cannot be read clearly. Failure to have proper decals in place can result in serious injury or death. (If you require safety decals, please contact Oilgear for replacement safety decals, at no charge.)

⚠ WARNING

Be sure everyone is clear of the area around the hydraulic system before operating after servicing. Remain attentive at all times when operating to check your work until you are completely sure it is safe to return to service. Failure to heed this warning may result in serious personal injury or death.

⚠ WARNING

Wear the proper protective clothing when operating, servicing or maintaining the hydraulic system or the Oilgear pump. Wear the correct protective gear, safety glasses, gloves and safety shoes. Serious injury can result without proper protective gear.

⚠ WARNING

Make sure to keep hands, feet and other parts of your body clear of revolving or moving parts. Failure to comply can cause serious injury.

⚠ WARNING

DO NOT wear watches, rings or jewelry while working with electrical and mechanical equipment. These items can be hazardous and can cause serious and painful injuries if they come into contact with electrical wires, moving parts or hydraulic equipment.

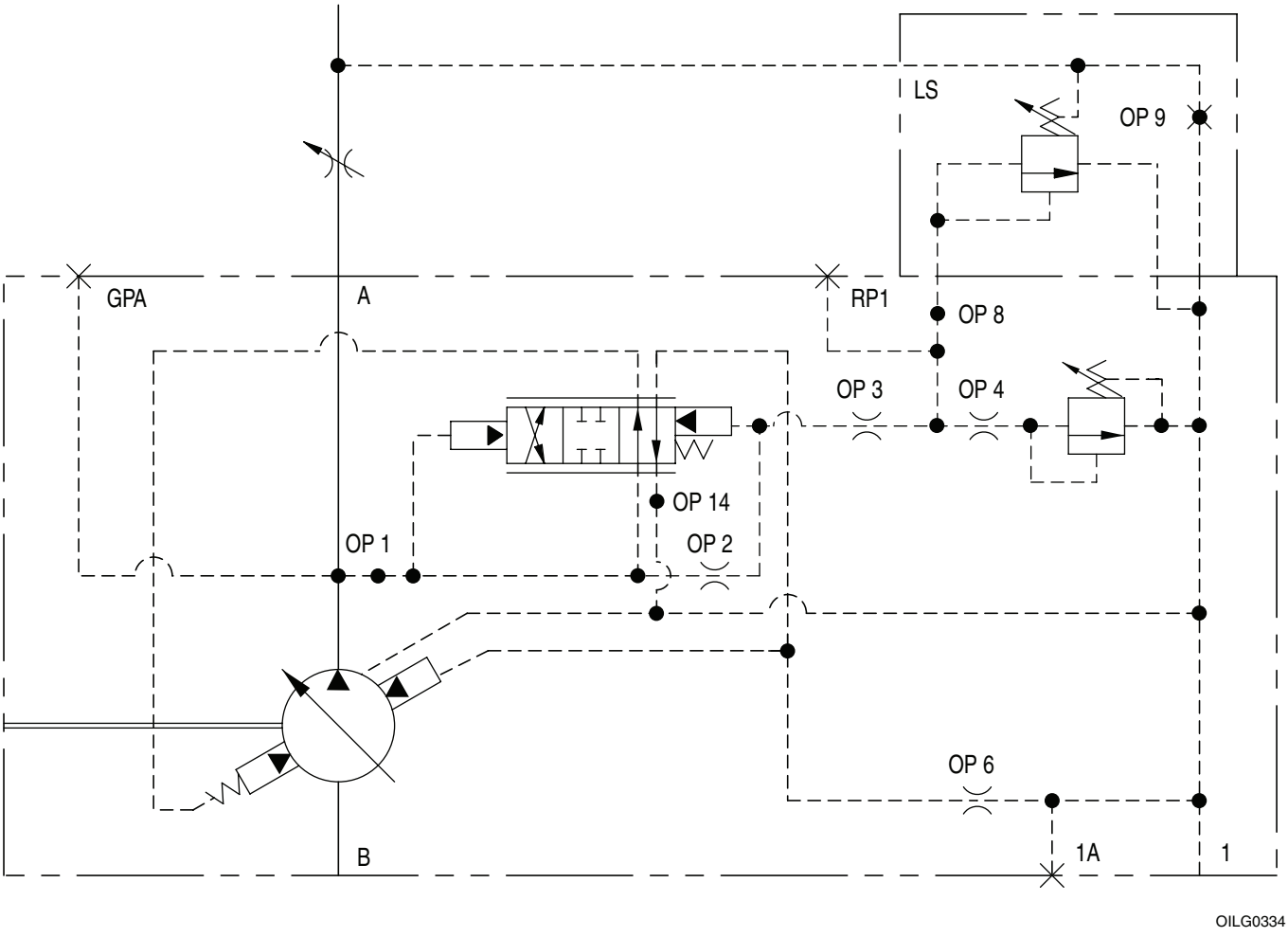

Figure 2. ASA Diagram for "P-1NN/F" Control Shown with Typical Pump

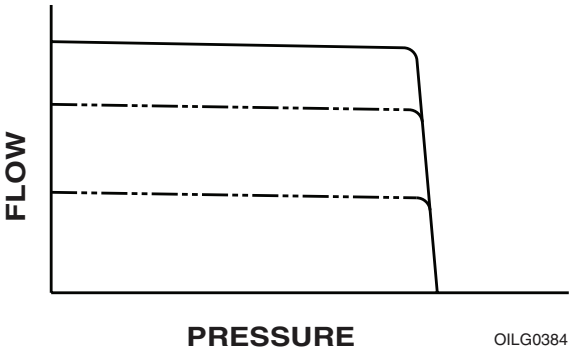

Figure 3. Curve Indicating Flow Versus Pressure for "P-1NN/F" Type Control

TROUBLESHOOTING

PROBLEM	CAUSES	REMEDY
Unresponsive or Unstable Control	Swashblock bearing surface and/or saddle bearings worn or damaged	Refer to 947034 Pump Service Instructions.
	Fluid is contaminated	Inspect and clean if necessary. Refer to Filtration Recommendations Bulletin 90007.
	Damaged or sticking load sense spool	Inspect and clean if necessary. Replace damaged parts.
	Contamination trapped between control piston and bore not allowing piston to move smoothly	
	Contamination trapped between control spool and bore not allowing spool to move smoothly	
	Insufficient control flow	Increase size of control orifice “OP 6.”
	Worn or damaged pilot relief seat and/or poppet	Inspect and replace if necessary.
	Faulty remote function circuit	
	Hydraulic line between remote fuction and pump port RP1 is incorrect	Change hydraulic line.
Insufficient Outlet Volume	Improper load sense adjustment	Adjust load sense CW to increase flow.
	Swashblock bearing surface and/or saddle bearings worn or damaged	Refer to 947034 Pump Service Instructions.
	Low input drive speed	
	Worn cylinder barrel and/or valve plate mating surfaces	
	Failed drive shaft	
	Worn or damaged piston shoes and/or swashblock	
	Worn pistons and/or piston bores	
	Maximum volume stop adjusted incorrectly	Adjust maximum volume stop CCW to increase flow.
	Pressure compensator is set too close to operating pressure	Adjust pressure compensator CW to increase pressure.
	Control piston stuck off stroke	Inspect and replace if necessary.
	Faulty remote function circuit	
Unable to Develop Full Pressure	System requires more flow than available	Check system for leaks or open functions.
	Pressure compensator adjustment not set correctly	Adjust pressure compensator CW to increase pressure.
	Contamination in control spool	Inspect and clean if necessary.
	Contamination in load sense spool	
	Worn or damaged pilot relief seat and/or poppet	Inspect and replace if necessary.
	Control piston stuck off stroke	
	Faulty remote function circuit	
Excessive Pressure	Swashblock bearing surface and/or saddle bearings worn or damaged	Refer to 947034 Pump Service Instructions.
	Pressure compensator adjustment not set correctly	Adjust pressure compensator CCW to decrease pressure.
	Contamination in “OP 3” or “OP 4”	Inspect and clean if necessary.
	Restricted passage between outlet and control spool	
	Contamination trapped between control piston and bore not allowing piston to move smoothly	Inspect and clean if necessary. Replace damaged parts.
	Contamination trapped between control spool and bore not allowing spool to move smoothly	
	Faulty remote function circuit	Inspect and replace if necessary.

PRINCIPLE OF OPERATION

Operation for a typical pump is described. Section diagrams are a representation of typical pumps with “P-1NN/F” control.

Functionally, the swashblock (and resultant displacement) is positioned by two opposite acting control pistons (unloading control piston and bias control piston).

See control parts drawing for actual configuration and location of part assemblies, orifices, connections and ports.

STARTING

The bias spring **(329)** positions the control pistons and connected pump swashblock so that the pump is at maximum displacement to raise pressure in the system.

RAISING PRESSURE - LOADING

Pump outlet pressure is ported to the control through Port “OP 1” to the control spool **(305)** and to the bias control piston **(303).** Outlet pressure is also transmitted through orifice Port “OP 2,” allowing the pressure acting on either end of the control spool **(305)** to be equal. In this condition, the control spool **(305)** is held in position only by the spring **(328)**.

The outlet pressure through Port “OP 2” is further transmitted through Port “OP 3” and Port “OP 4” to the adjustable pressure compensator relief valve and to the load sense spool **(353)**.

NOTE The load sense spool **(353)** is held in the closed position by both a spring **(355)**, and the load pressure **(P2)** piped to the spring chamber.

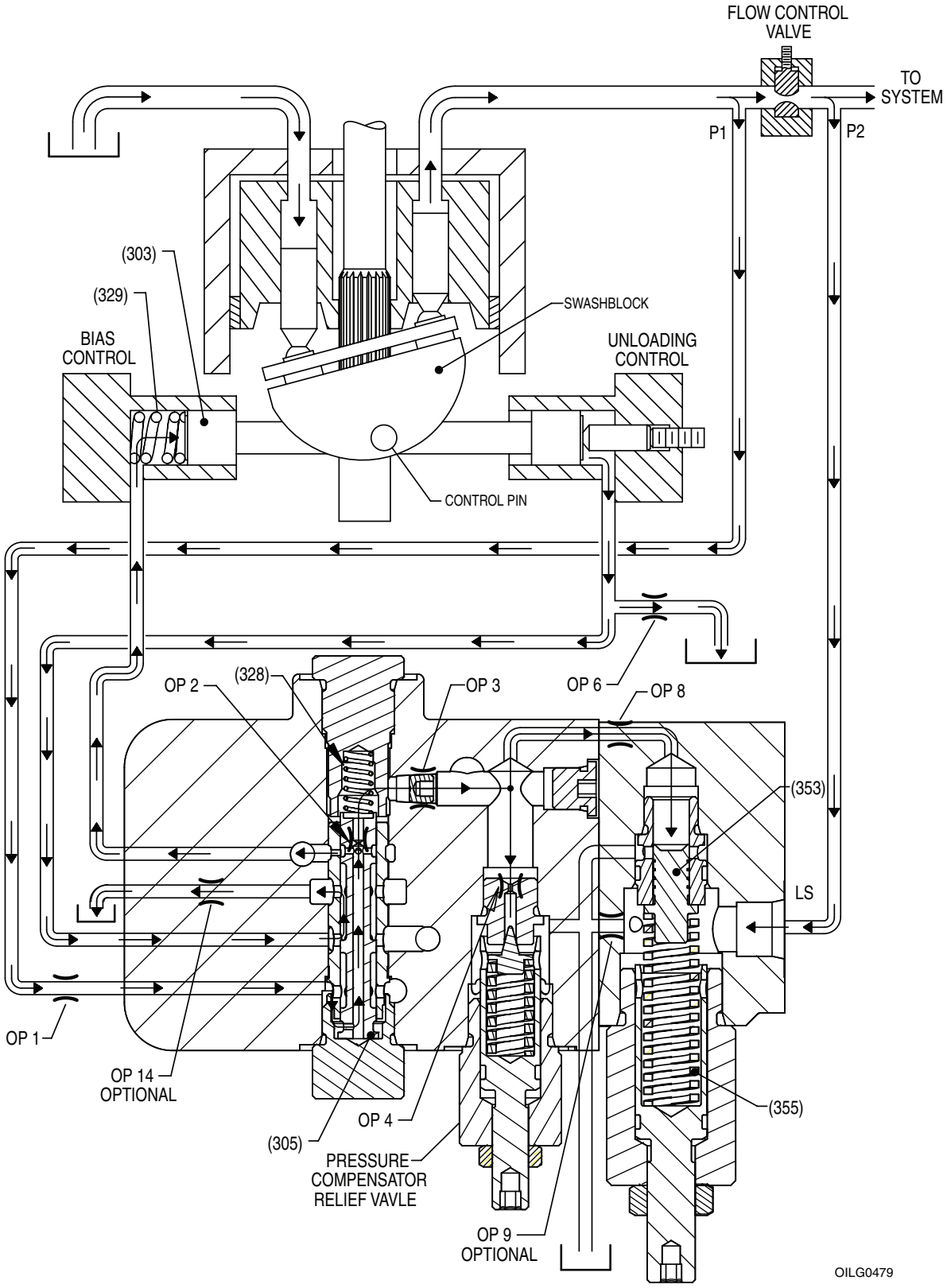

Figure 4. Raising Pressure - Loading

LOAD SENSE CONTROL - UNLOADING

The load sensing module matches flow to load demand. As the load on the system increases, pump pressure will increase while keeping the flow (volume) constant. The load sense spool **(353)** senses and maintains a constant pressure differential across the flow control valve in the delivery line. Pump flow becomes a function of the flow control valve opening area. For a given flow control valve setting, the pump will maintain a constant flow regardless of changes in pump input speed and/or working pressure.

As differential pressure across the flow control valve increases, the pressure differential across the load sense spool **(353)** increases, causing the load sense spool **(353)** to shift and allow flow through the load sense valve to drain. Pressure on the spring end of the control spool **(305)** is decreased, causing a pressure differential across the spool **(305)**. The pressure differential forces the control spool **(305)** to shift and compress the spring **(328)**. Outlet pressure is then ported to the unloading control piston **(302)**, and fluid behind the bias control piston **(303)** is ported to drain. Pump displacement will decrease until differential pressure across the flow control valve reaches the setting of the load sense valve.

As differential pressure across the flow control valve decreases, the pressure differential across the load sense spool **(353)** decreases, causing the load sense spool **(353)** to shift and close off the path to drain. Pressure on either side of the control spool **(305)** will become equal and the spring **(328)** will force the spool **(305)** to shift. Fluid from the unloading control piston **(302)** is then ported to drain and outlet pressure is ported to the bias control piston **(303)**. Pump displacement will increase until the differential pressure across the flow control valve reaches the setting of the load sense valve.

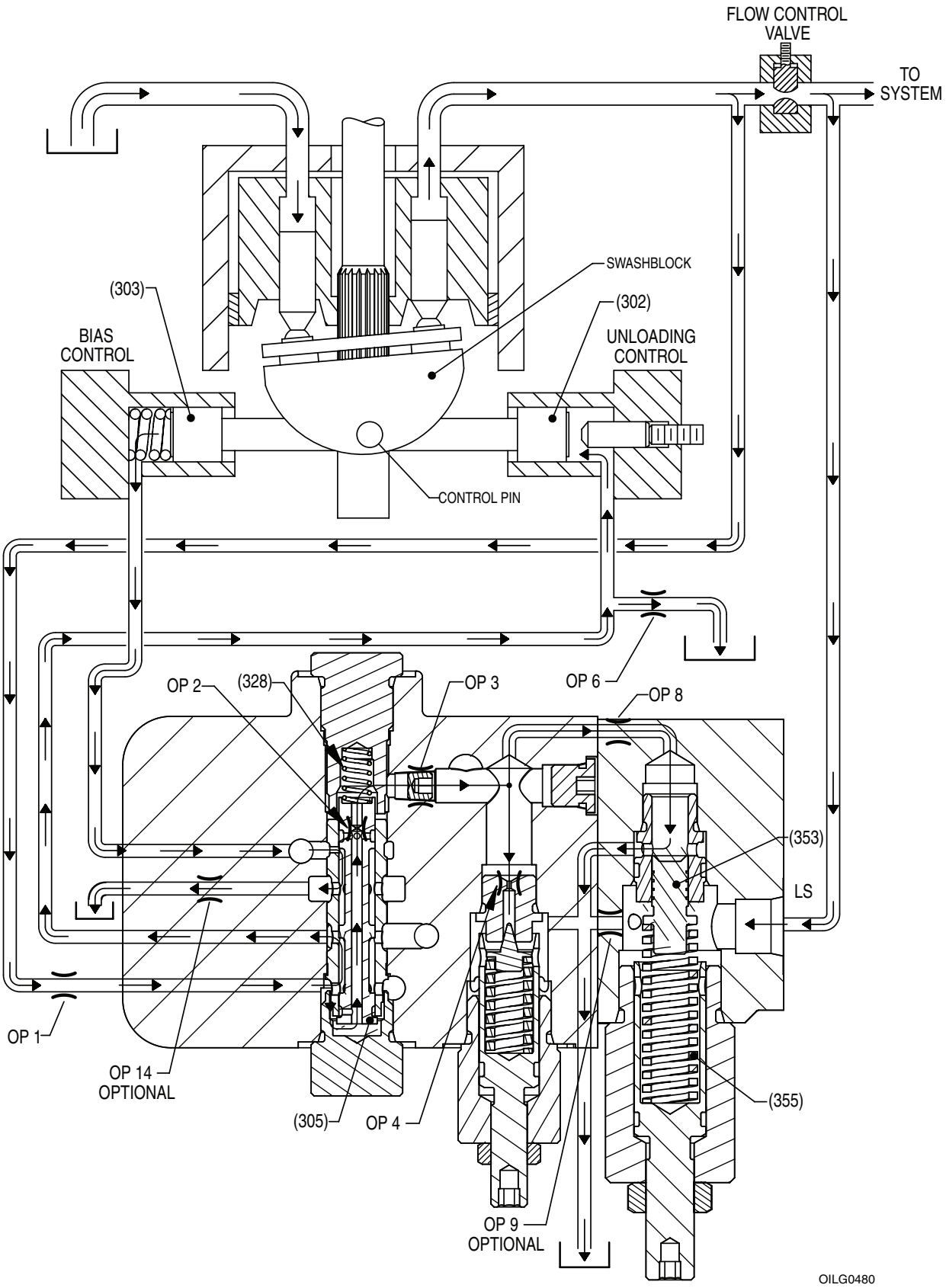

Figure 5. Load Sense Control - Unloading

COMPENSATING PRESSURE - UNLOADING

When pressure on the relief valve poppet **(307)** exceeds the presetting of the relief valve spring **(327)**, the relief valve poppet **(307)** moves off seat **(308)** and allows flow through the relief valve to drain. Pressure on the spring end of the control spool **(305)** is decreased, causing a pressure differential across the spool **(305)**. The pressure differential forces the control spool **(305)** to shift and compress the spring **(328)**. Outlet pressure is then ported to the unloading control piston **(302)**, and fluid behind the bias control piston **(303)** is ported to drain. Pump displacement will decrease to maintain system pressure as set by the relief valve adjuster **(310)**.

HOLDING PRESSURE

If the system pressure drops below the preset compensating pressure, the relief valve poppet **(307)** seats and closes the path to drain. Pressure on either side of the control spool **(305)** will become equal and the spring **(328)** will shift the spool **(305)** to the original position **(Figure 4)**. Fluid from the unloading control piston **(302)** is then ported to drain and outlet pressure is ported to the bias control piston **(303)**. Pump displacement will increase until the relief valve setting is reached again.

ORIFICE FUNCTIONS

Orifice Number	Decreasing orifice diameter will result in: (increasing diameter will do the opposite)
“OP 1”	Decreased “off stroke” time, do not decrease to less than .125"
“OP 2”	Do not change
“OP 3”	Do not change
“OP 4”	Do not change
“OP 6”	Decreased stability
“OP 8”	Increased stability
“OP 9”	Optional
“OP 14”	Decreased “on stroke” time, do not decrease to less than .081"

“OP 1” Orifice not used (standard)

“OP 2” Integral to spool, item 305

“OP 4” Integral to seat, item 308

“OP 6” .089 orifice

“OP 8” Orifice not used (standard)

“OP 14” Orifice not used (standard)

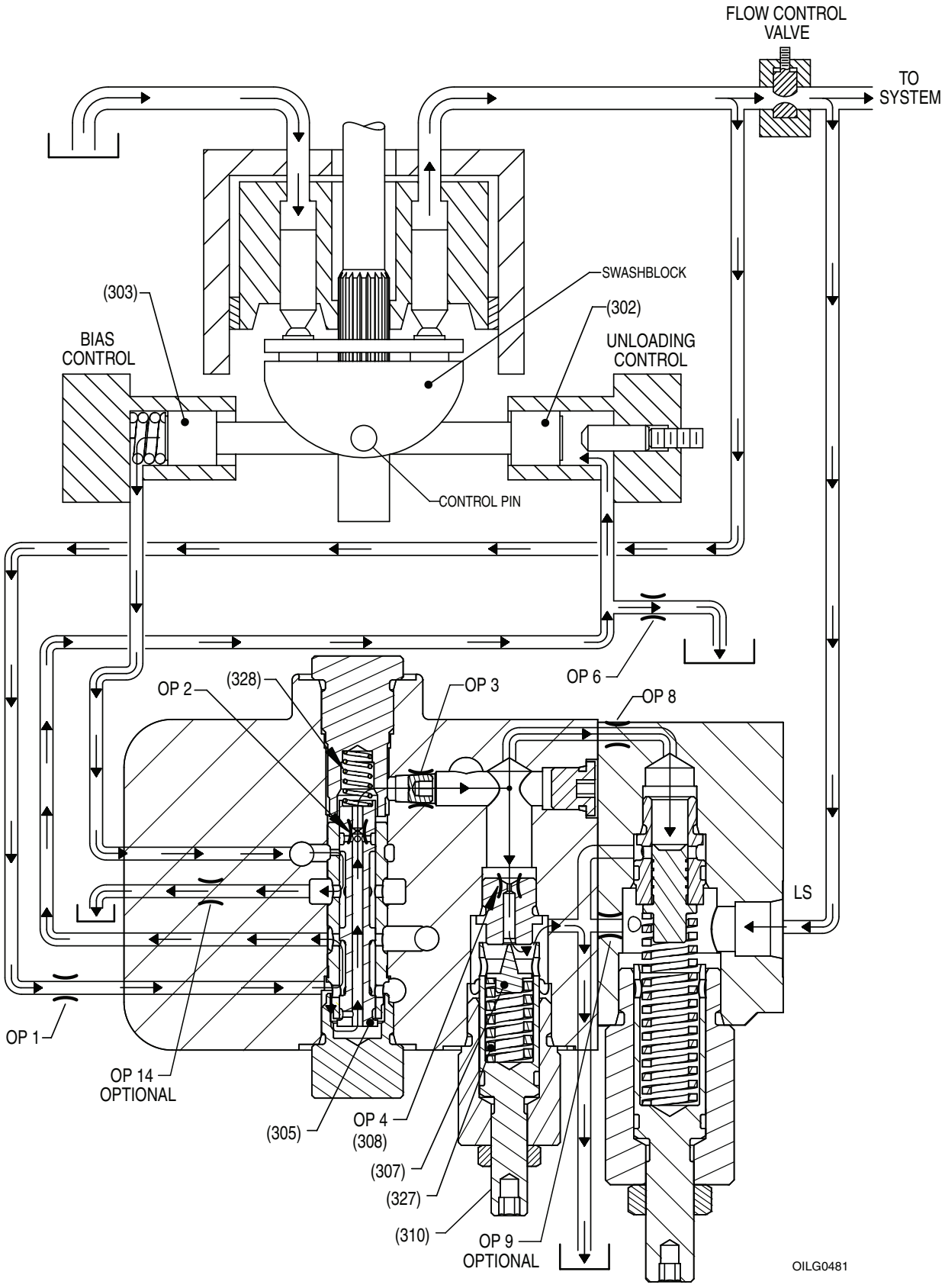

Figure 6. Compensating Pressure - Unloading

SCREW AND PLUG TORQUES FOR PVG-150 “P-1NN/F” CONTROL

Item Number	Head Type & Hex Size	Tightening Torque
306	7/8 external	50 ft•lb (68 N•m)
308	7/16 external	200 in•lb (23 N•m)
309	1 external	80 ft•lb (108 N•m)
315A	3/8 internal	100 ft•lb (136 N•m)
315B	3/8 internal	100 ft•lb (136 N•m)
316	3/8 internal	100 ft•lb (136 N•m)
319	5/32 internal	48 in•lb (5 N•m)
321	3/16 internal	120 in•lb (14 N•m)
322	7/8 external	50 ft•lb (68 N•m)
323	1 1/4 external	120 ft•lb (163 N•m)
325	5/32 internal	48 in•lb (5 N•m)
342	1/8 internal	45 in•lb (5 N•m)
351	1 1/4 external	85 ft•lb (115 N•m)
354	5/8 external	70±10 in•lb (8±1 N•m)
356	5/32 internal	57 in•lb (6 N•m)
364	3/32 internal	20 in•lb (2 N•m)
720	1 1/4 external	120 ft•lb (163 N•m)

CONTROL O-RING SEALS

Item Number	ARP 568 Uniform Size Number	Shore A Durometer		
		Viton	HNBR	EPR
314	-140	70	75	80
330	-013	90	90	80
331	-014	90	90	80
333	-906	90	90	80
334	-908	90	90	80
335	-910	90	90	80
336	-912	90	90	80
337	-014	*	*	*
338	-904	90	90**	80
345	-903	90	90**	80
358	-010	90	90	80
359	-016	90	90	80
360	-906	90	90	80
361	-912	90	90	80
362	-014	90	90	80
399	-014	*	*	*
1014	-014	90	90	80
1912	-912	90	90	80

* Teflon Backup Ring
** 90 durometer viton seals used

PARTS LIST FOR PVG-150 "P-1NN/F" CONTROL

Parts used in these assemblies are per Oilgear specifications. Use only Oilgear parts to ensure compatibility with assembly requirements. When ordering replacement parts, be sure to include pump type and serial number, and bulletin number and item number. Specify the type of hydraulic fluid to ensure seal and packing compatibility.

Item	Description	Qty
301	Control Housing	1
302	Unloading Control Piston	1
303	Bias Control Piston	1
304	End Cap	1
305	Control Spool	1
306	End Plug, Spring End	1
307	Relief Valve Poppet	1
308	Seat	1
309	Pilot Relief Bonnet	1
310	Relief Valve Adjuster	1
312	Shim	4
314	O-ring	1
315A	Screw	2
315B	Screw	1
316	Screw	4
318	Jam Nut	1
319	Orifice	1
321	SAE #4 Plug	2
322	Filter End Plug	1
323	Maximum Volume Plug	1
325	Orifice	1
327	Relief Valve Spring	1
328	Bias Spring	1
329	Bias Spring	1
330	O-ring	3
331	O-ring	1
333	O-ring	1
333	O-ring	1
334	O-ring	2

Item	Description	Qty
335	O-ring	1
336	O-ring	1
337	Backup Ring	1
338	O-ring	2
340	Permanent Plug	2
342	SAE #3 Plug	1
345	O-ring	2
348	Roll Pin	4
350	Load Sense Module	1
351	Load Sense Bonnet	1
352	Load Sense Adjusting Screw	1
353	Load Sense Spool	1
354	Load Sense Seat	1
355	Spring	1
356	Screw	4
358	O-ring	3
359	O-ring	2
360	O-ring	1
361	O-ring	1
362	Backup Ring	2
364	Setscrew	1
365	Jam Nut	1
399	Backup Ring	1
718	Maximum Stop Adjusting Screw	1
719	Jam Nut	1
720	Maximum Stop Bonnet	1
1014	O-ring	1
1912	O-ring	1

PVG-150 P-1NN/F Control Service Kits

Reference: 520167-102 Ass'y Drwg

Document Number: 520167-SK2

Revision: 0

Sheet 1 of 1

Description	Kit No.	Design Series	Items Included (quantity is 1 unless noted)
Control Pistons & Spring			
All	K318946-001	A1	302, 303, 329
Pressure Compensator Relief			
Viton Seals	L723987-101	A1	307, 308, 312(4), 327, 333
HNBR Seals	L723987-104		
EPR Seals	L723987-103		
Load Sense & Press. Comp. Relief			
Viton Seals	L723987-108	A1	307, 308, 312(4), 327, 333, 353, 354, 355, 359(2), 360, 362(2)
HNBR Seals	L723987-111		
EPR Seals	L723987-110		
Pressure Compensator Spool			
All	L724407-002	A1	305, 328
Pressure Compensator Adjuster			
Viton Seals	L300574HS04	A1	309, 310, 318, 331, 335, 337
HNBR Seals	L300574HS10		
EPR Seals	L300574HS06		
Load Sense Adjuster			
Viton Seals	L318966-002	A1	351, 352, 359, 361, 362, 365
HNBR Seals	L318966-005		
EPR Seals	L318966-004		
Adjustable Maximim Volume Stop			
Viton Seals	L516319-006	A1	399, 718, 719, 720, 1014, 1912
HNBR Seals	L516319-007		
EPR Seals	L516319-008		
Control Seal Kit			
Viton Seals	K516336-023	A1	314, 330(3), 331, 333, 334(2), 335, 336, 337, 338(2), 345(2), 358(3), 359(2), 360, 361, 362(2), 399, 1014, 1912
HNBR Seals	K516336-024		
EPR Seals	K516336-025		
End Cap Assembly			
Viton Seals	K520143-104	A1	303, 304, 305, 306, 307, 308, 309, 310, 312(4), 314, 315A(2), 315B, 318, 321(2), 322, 325, 327, 328, 330(3), 331, 333, 334(2), 335, 337, 338(2), 340(2), 348(4)
HNBR Seals	K520143-105		
EPR Seals	K520143-106		
Load Sense Module			
Viton Seals	L723004-001	A1	350, 351, 352, 353, 354, 355, 356(4), 358(3), 359(2), 360, 361, 362(2), 364, 365
HNBR Seals	L723004-817		
EPR Seals	L723004-803		

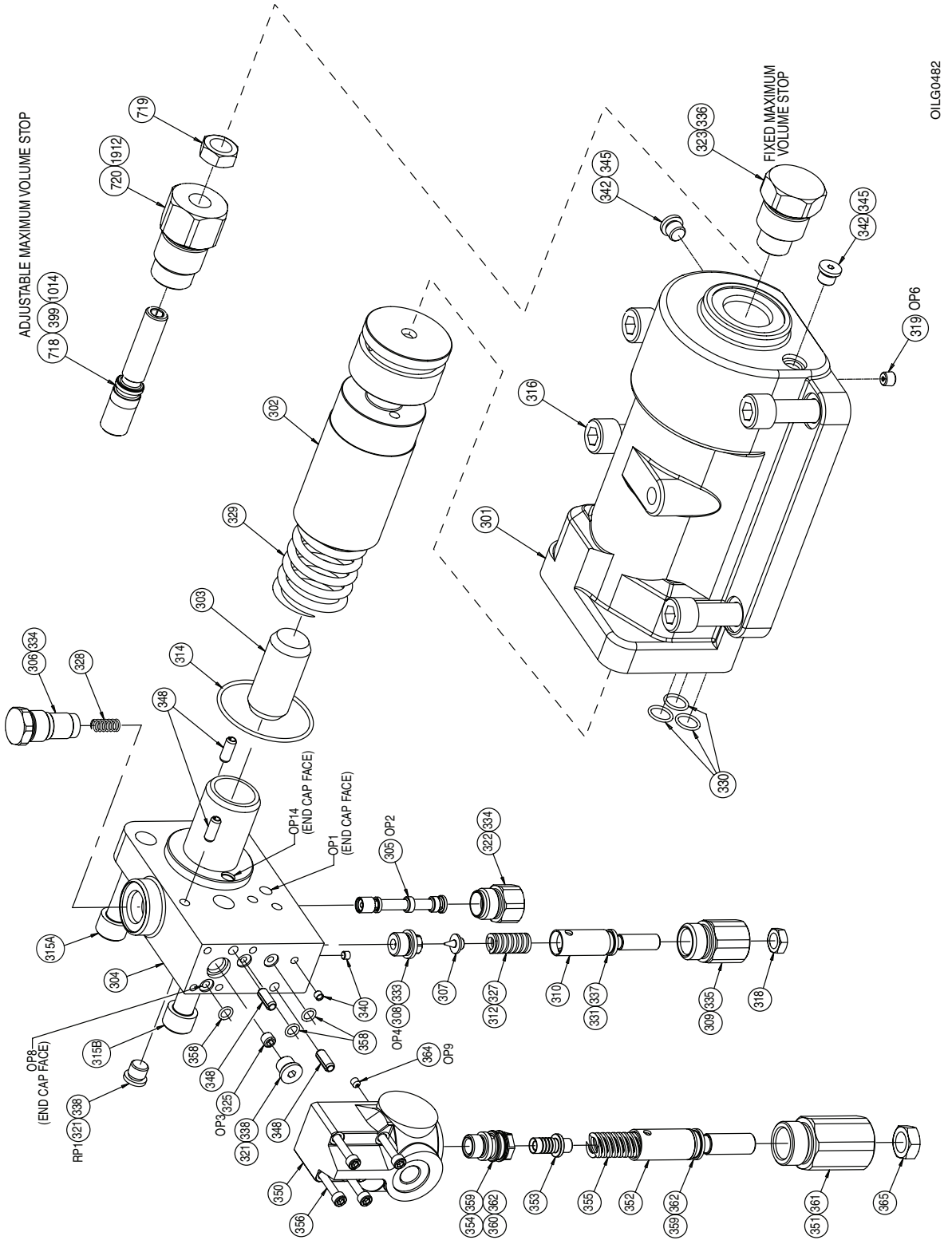

Figure 7. Exploded Parts Drawing for PVG-150 “P-1NN/F” Single Pressure Compensator w/Load Sense Control (520167-102 sheet 1)

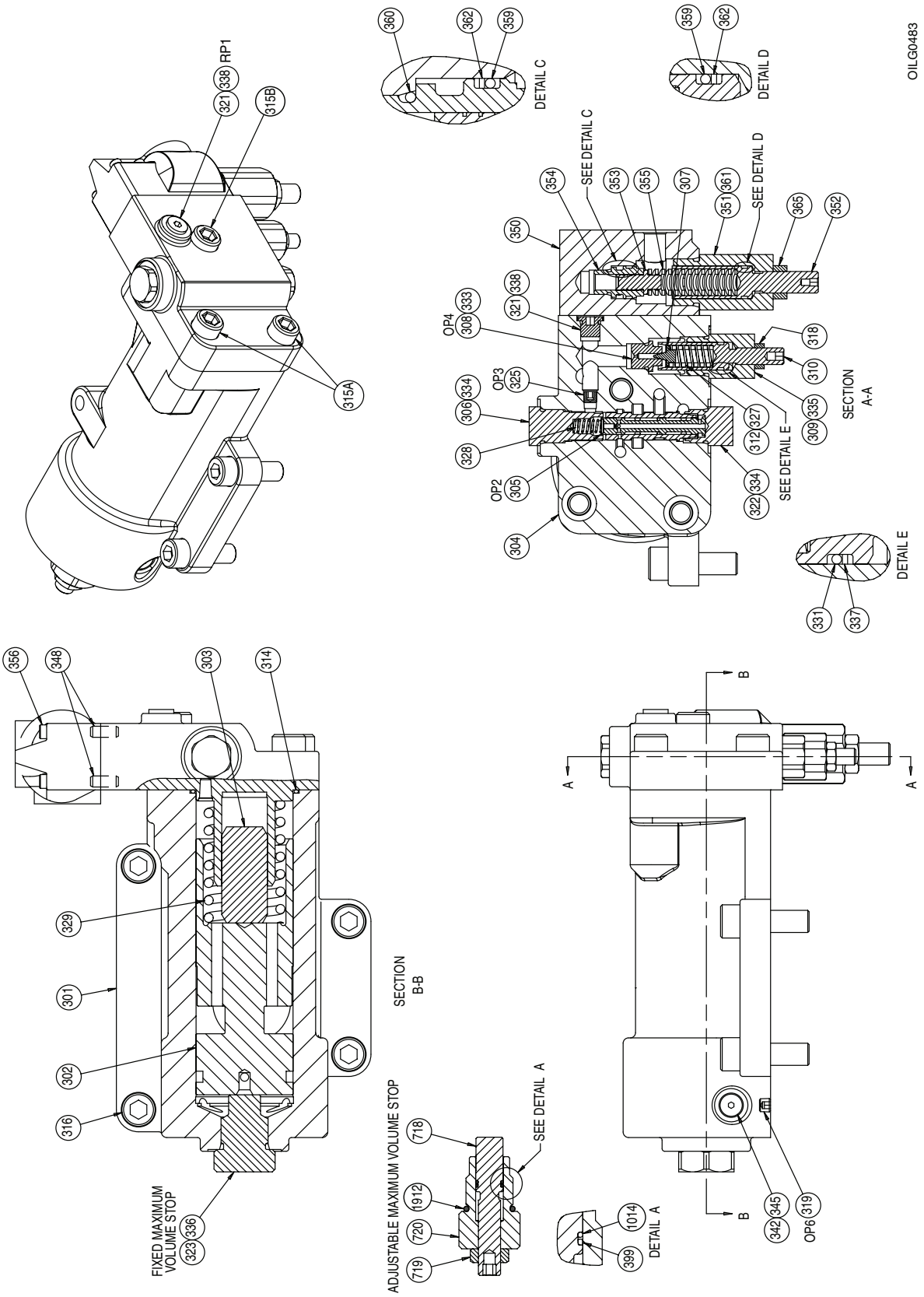

Figure 8. Cross Section Parts Drawing for PVG-150 "P-1NN/F" Single Pressure Compensator Control (520167-102 sheet 2)

NOTES

AFTER SALES SERVICES

At Oilgear we build products to last. It is the nature of this type of machinery to require proper maintenance regardless of the care we put into manufacturing. Oilgear has several service programs in place to help you.

STAY-ON-STREAM SERVICE

By signing up for Oilgear's Stay-On-Stream program, you can prepare for problems before they happen. Certain field tests such as fluid testing, slip testing and electronic profile recording comparisons can be performed by our field service people or your own factory trained personnel. These tests can indicate problems before they become "down-time" difficulties.

SERVICE SCHOOLS

Oilgear conducts training to train your maintenance personnel. "General" hydraulic or electronic training is conducted at our Milwaukee, Wisconsin plant on a regular basis. "Custom" training, specifically addressing your particular hydraulic and electro-hydraulic equipment, can be conducted at your facilities.

SPARE PARTS AVAILABILITY

Prepare for your future needs by stocking Oilgear original factory parts. Having the correct parts and necessary skills "in-plant" enables you to minimize "down-time." Oilgear has developed parts kits to cover likely future needs. Oilgear Field Service Technicians are also ready to assist you and your maintenance people in troubleshooting and repairing equipment.

Oilgear
PERFORMANCE
ASSURANCE

Issued: February 2010

THE OILGEAR COMPANY
2300 South 51st Street
Milwaukee, Wisconsin 53219
www.oilgear.com

Bulletin 947676