PUMP, VARIABLE DELIVERY
PVV-440 "A2"

BASIC PUMP

ENGINEERING | 1

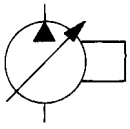

Installation Drawing — Basic Pump without Control

PVV–440–A2B

NOTES:
1. PUMPS DESIGNED FOR ONE–WAY SERVICE ARE DIMENSIONED AS SHOWN.
2. THESE UNITS ARE DESIGNED TO RUN CASE FULL OF FLUID AT ALL TIMES. FILL CASE BEFORE STARTING AND CONNECT DRAIN LINES ACCORDINGLY.
3. HORIZONTAL MOUNTING STANDARD. FOR VERTICALLY MOUNTED UNITS, SEE OILGEAR BULLETIN 90014.
4. DIMENSIONS GIVEN IN MILLIMETERS.
5. NET WEIGHT – 340 KG.

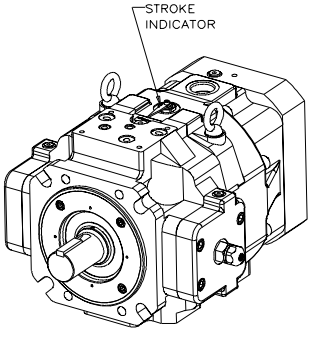

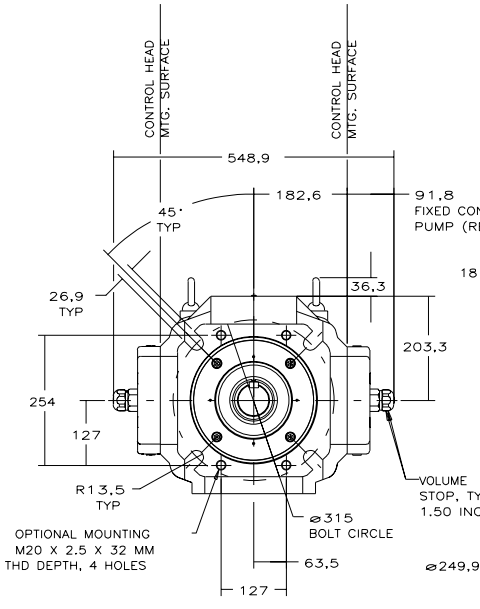

ISO 250 4–BOLT MTG. PATTERN

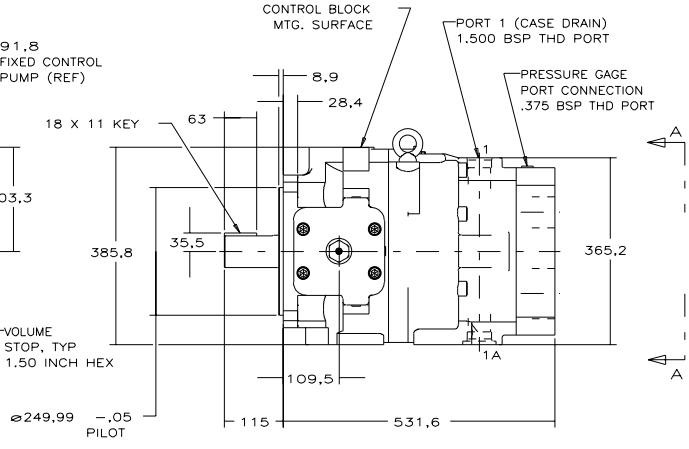

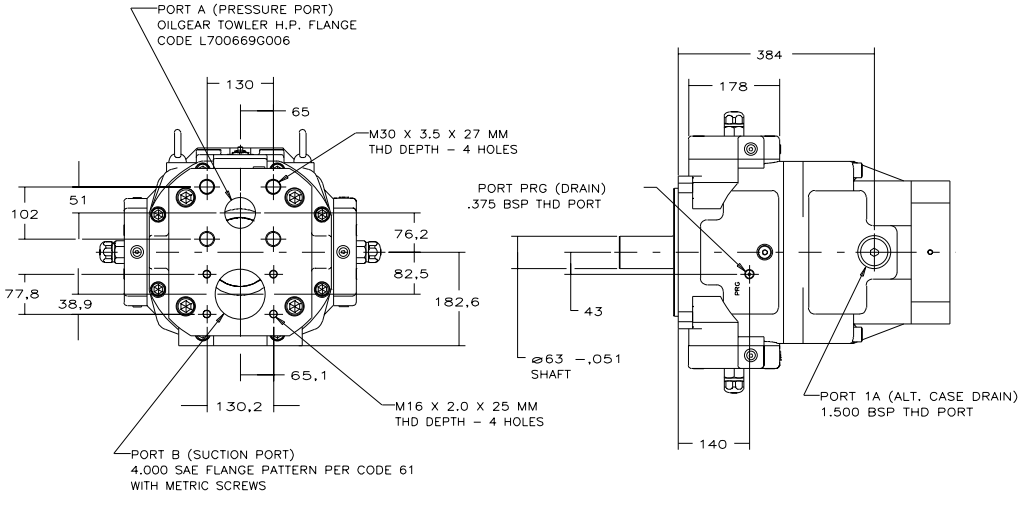

VIEW A–A

519679-301

Telephone: (414) 327-1700
Fax: (414) 327-0532

OILGEAR
2300 So. 51st. Street
Milwaukee, WI USA 53219

Issued: Nov., 2002
DS-M47683