THE WORLD DEMANDS
OILGEAR

PVWJ PUMPS

Designed to be cost-effective, stable and low-maintenance

MAKING MACHINES GO AND PROBLEMS GO AWAY®

910006

OILGEAR

MAKING MACHINES GO AND PROBLEMS GO AWAY®

THE WORLD DEMANDS OILGEAR

Oilgear has a rich legacy of more than 100 years manufacturing pumps and hydraulic equipment. We pride ourselves on **MAKING MACHINES GO AND PROBLEMS GO AWAY®**. For decades, Oilgear has developed hydraulic techniques to meet the unique needs for many equipment manufacturers and end users worldwide.

OILGEAR
TRAVERSE CITY, MI USA

OILGEAR
FREMONT, NE USA

OILGEAR TOWLER
UK

OILGEAR
SOUTH KOREA

OILGEAR
CHINA

OILGEAR
SPAIN

Global Service Network

No matter where you are, Oilgear can quickly and efficiently provide service to you.

Oilgear's large pump manufacturing centers are in Traverse City, Michigan and Leeds, England. Further domestic manufacturing capacity and product specialization are provided by our Fremont, Nebraska, pump manufacturing facility. We also have manufacturing and field service centers in Germany, France, Spain, China and Korea.

Engineering and Application Expertise

Oilgear's engineering capabilities are second to none. Our application and field engineers are factory-trained and have spent years, often decades, working in the market segments they service. Every Oilgear engineer brings this personal experience to the meeting table, plus the collective knowledge gained from Oilgear's more than 100 years of servicing the general industry with innovative fluid power solutions.

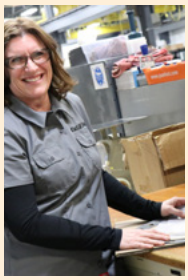

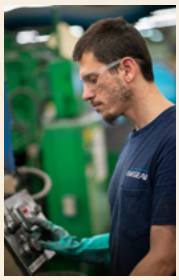

TABLE OF CONTENTS

Pump Features and Benefits 4

Pump Specifications 5

Model Ordering Information 6

PVWJ-011 *Performance Data / Inlet / Sound Data • Dimensions* 7-8
Installation Drawings 9-10

PVWJ-014 *Performance Data / Inlet / Sound Data • Dimensions* 11-12
Installation Drawings 13-14

PVWJ-022 *Performance Data / Inlet / Sound Data • Dimensions* 15-16
Installation Drawings 17-18

PVWJ-025 *Performance Data / Inlet / Sound Data • Dimensions* 19-20
Installation Drawings 21-22

PVWJ-034 *Performance Data / Inlet / Sound Data • Dimensions* 23-24
Installation Drawings 25-26

PVWJ-046 *Performance Data / Inlet / Sound Data • Dimensions* 27-28
Installation Drawings 29-30

PVWJ-064 *Performance Data / Inlet / Sound Data • Dimensions* 31-32
Installation Drawings 33-34

PVWJ-076 *Performance Data / Inlet / Sound Data • Dimensions* 35-36
Installation Drawings 37-38

PVWJ-098 *Performance Data / Inlet / Sound Data • Dimensions* 39-40
Installation Drawings 41-42

PVWJ-130 *Performance Data / Inlet / Sound Data • Dimensions* 43-44
Installation Drawings 45-46

Control Options 47-50

Control Matrix 51

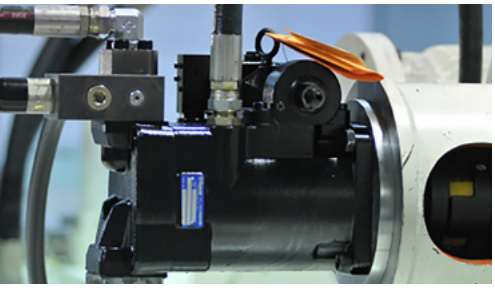

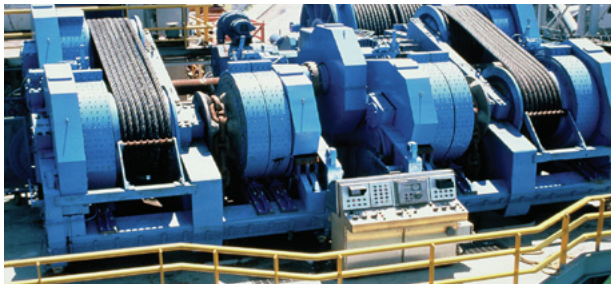

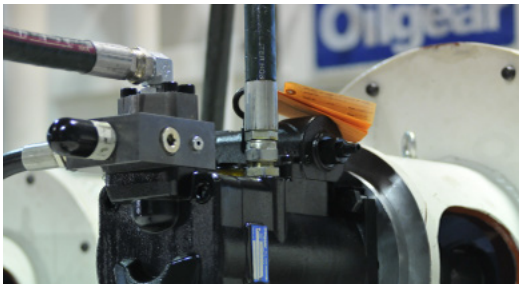

PVWJ FAMILY | OPEN LOOP, AXIAL PISTON HYDRAULIC PUMPS

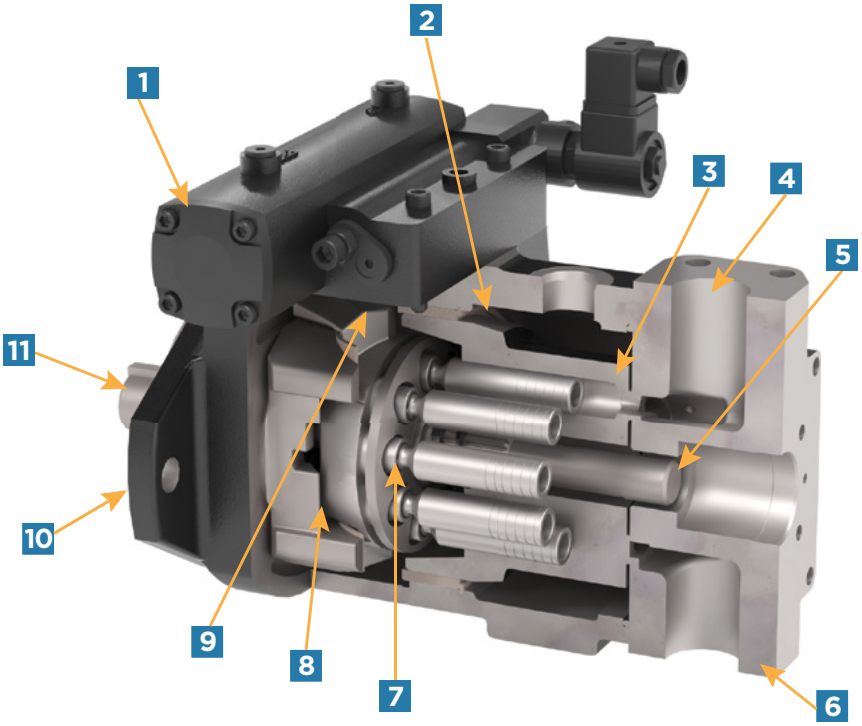

1 MULTIPLE CONTROL TYPES
Field interchangeability without disconnecting from drive or system piping

2 CYLINDER MOUNTED POLYMEROUS JOURNAL BEARING
- Allows operation with special fluids
- Provides infinite bearing life
- Permits compact design

3 HARDENED CYLINDER SURFACE RUNNING ON HARDENED VALVE PLATE
- Provides greater resistance to contamination
- Provides longer life
- Allows operation with special fluids
- Provides greater resistance to contamination
- Provides longer life
- Allows operation with special fluids

4 QUIET VALVE PLATE DESIGN
- Minimizes noise at typical
- Rear or side port connections available

5 THRU-SHAFT AVAILABILITY
- Allows for multiple pump installation from a single drive shaft
- Allows pumps to drive auxiliary devices

6 THREE FRAME SIZES
- Ten capacity ranges allowing greater flexibility to selectively match pressure and capacity
- Low flow/high pressure to low pressure high flow from the same frame sizes

7 STEEL SHOES WITH SPECIALLY TREATED FACES FOR INCREASED FLUID RETENTION, RUNNING ON HARDENED SWASHBLOCK SURFACE
- Provides a higher degree of contamination resistance
- Allows higher pressure operation with long life
- Allows operation with water base, low viscosity or other special fluids
- Provides longer life

8 SPECIAL POLYMEROUS SADDLE BEARINGS
- Allows running on low viscosity or other special fluids
- Permits consistent control reaction
- Eliminates troublesome yoke bearings
- Provides long life

9 PATENTED PRESSURE LUBRICATED SWASHBLOCK DESIGN
- Provides high performance for high- pressure high-cylinder operation flow from the same frame sizes

10 SEALED FRONT SHAFT BEARING
- Allows operation with special fluids
- Permits side loading

11 SAE KEYED OR SAE SPLINED SHAFT

PVWJ FAMILY SPECIFICATIONS

			FRAME SIZE	A-FRAME			B-FRAME			C-FRAME			
			DISPLACEMENT	011	014	022	025	034	046	064	076	098	130
DRIVE	Maximum (RPM) *May require supercharged inlet*			3600	3600	3600	3000	3000	2700	2700	2700	2700	2100
DRIVE	Minimum (RPM)			600	600	600	600	600	600	600	600	600	600
DRIVE	Torque to turn shaft (ft. lbs.)			1.7 to 2.1	1.7 to 2.1	1.7 to 2.1	2.9 to 3.3	2.9 to 3.3	2.9 to 3.3	7.9 to 8.3	7.9 to 8.3	7.9 to 8.3	7.9 to 8.3
DRIVE	Rotational Moment of Inertia (lbs.-in^2)			5	5	5	21	21	21	53	53	53	53
OUTPUT	Pressure (PSI)	Peak		5800	4500	3500	5800	4000	3000	5800	4000	3000	2000
OUTPUT	Pressure (PSI)	Continuous Rated		5000	4000	3000	5000	3500	2500	5000	3500	2500	1500
OUTPUT	Nominal Volume (GPM) *at 1800 RPM, Continuous Rated Pressure, and Full Displacement*			4.2	5.9	9.5	10.9	14.7	20.6	27.4	33.7	43.3	58.2
CASE	Maximum Pressure (PSI) w/ Standard Shaft Seal			25	25	25	25	25	25	25	25	25	25
CASE	Case Drain Port Size			#8 SAE	#8 SAE	#8 SAE	#10 SAE	#10 SAE	#10 SAE	#12 SAE	#12 SAE	#12 SAE	#12 SAE
CONTROLS	Pressure Compensator	Minimum Pressure Setting (PSI)		750	750	750	750	750	750	750	750	750	750
CONTROLS	Pressure Compensator	On-Stroke Time (ms) Simulating a step function at 1800 RPM, Continuous Rated Pressure, 500 PSI P$_\Delta$		100	100	100	100	100	100	200	200	200	200
CONTROLS	Pressure Compensator	Off-Stroke Time (ms) Simulating a step function at 1800 RPM, Continuous Rated Pressure, 500 PSI P$_\Delta$		80	80	80	80	80	80	200	200	200	200
CONTROLS	Load Sense	Minimum Setting (PSI)*		100	100	100	100	100	100	100	100	100	100
CONTROLS	Load Sense	Maximum Setting (PSI)*		350	350	350	350	350	350	350	350	350	350
FLUID	Viscosity (SSU)	Minimum		65	65	65	65	65	65	65	65	65	65
FLUID	Viscosity (SSU)	Maximum		2000	2000	2000	2000	2000	2000	2000	2000	2000	2000
TEMPERATURE	Fluid Operating Range (F°)			14 to 190	14 to 190	14 to 190	14 to 190	14 to 190	14 to 190	14 to 190	14 to 190	14 to 190	14 to 190
TEMPERATURE	Fluid Minimum Starting (F°)			-40	-40	-40	-40	-40	-40	-40	-40	-40	-40
TEMPERATURE	Fluid Maximum at Case Drain Port (F°)			230	230	230	230	230	230	230	230	230	230

* PVWJ offers 2 LS setting ranges. One option offers a 100-200 psi range, and the other offers a 225-350 PSI range.

PVWJ | MODEL ORDERING INFORMATION

VARIABLE PUMP EXAMPLE	PVWJ — 034 — A1	U	V —	L	D	F	Y —	P —	1NN	SN —	AN —	05 —	-
BLOCK NUMBER	1 — 2 — 3	4	5 —	6	7	8	9 —	10 —	11	12 —	13 —	14 —	15

11a 11b 11c /11d 11e

11 = CONTROL MODIFIER

1 = UNIT, TYPE & DESIGN SERIES	
PVWJ	PVWJ Variable Displacement Pump

2 = UNIT TYPE		
A FRAME	011	10.8 cc/rev (0.66 cipr)
	014	14.1 cc/rev (0.86 cipr)
	022	22.1 cc/rev (1.35 cipr)
B FRAME	025	25.4 cc/rev (1.55 cipr)
	034	33.8 cc/rev (2.06 cipr)
	046	46.4 cc/rev (2.83 cipr)
C FRAME	064	63.6 cc/rev (3.88 cipr)
	076	76.5 cc/rev (4.67 cipr)
	098	98.3 cc/rev (6.00 cipr)
	130	130.2 cc/rev (7.94 cipr)

3 = DESIGN SERIES	
A1	Current for all displacements

4 = DESIGN SERIES MODIFIER	
U	SAE Connections & Mounting

5 = SEALS	
V	**Viton (Standard)**
P	EPR
B	Buna Nitrile

6 = ROTATION	
L	Left Hand (CCW)
R	Right Hand (CW)

7 = VALVE PLATE TYPE					
DISP.	SA	TA	SF	GF	DF
011	X	X			
014	X	X			
022	X	X			
025	X				X
034	X				X
046	X				X
064			X		X
076	X				X
098	X			X	X
130	X				X

SA = Rear Ported, with SAE Straight Ports
TA = Top/Bottom Ported, with Thru-Shaft and SAE Straight Ports
SF = Rear Ported, with SAE Flange Ports
GF = Top/Bottom Ported, with SAE Flange Ports
DF = Top/Bottom Ported, with Thru-Shaft and SAE Flange Ports

8 = CONNECTION TYPE	
A	SAE Straight Port
F	SAE Flange

9 = SHAFT TYPE			
Shaft Code	PVWJ-011 PVWJ-014 PVWJ-022	PVWJ-025 PVWJ-034 PVWJ-046	PVWJ-064 PVWJ-076 PVWJ-098 PVWJ-130
Y	.75" Keyed	.875" Keyed	1.25" Keyed
S	SAE A Spline	SAE B Spline	SAE C Spline
C	SAE B Spline ⑥	---	---
D*	SAE A Spline ⑥	SAE B Spline ⑦	SAE C Spline ⑦

* D shafts are "industrial" versions of S shafts

10 = CONTROL TYPE	
P	Pressure Compensating
M	Manual Stroking

11a = PRESSURE CONTROL OPTIONS		
1	Single PC Setting (Standard)	
2	Dual PC Settings	②⑤
L	Low PC Settings	
C	SIngle PC w/ Soft Start, N.O.	⑤
K	Single PC w/ Soft Start, N.C.	⑤

11a = MANUAL CONTROL OPTIONS		
N	Pintle w/o Neutral Bypass	①
S	Pintle w/ Neutral Bypass	①
H	Handwheel	

11b = SOLENOID VOLTAGE		
N	Non-Electrical Control	
0	115/60 - 110/50 VAC	④⑤
2	12 VDC	④⑤
3	24 VDC	④⑤

11c = CONNECTOR		
N	Non-electrical Control	
W	.500 NPT with Lite	④⑤
L	PG-11 with Lite	④⑤

11d = MODULE		
Blank unless required option		
F	Fixed Load Sense (170 psid)	
J	Adjustable Load Sense (100-220 psid)	
K	Adjustable Load Sense (225-350 psid)	
H	Power Limiter, PC Override	③
G	Power Limiter w/ Fixed Load Sense, PC Override	
C	Power Limiter w/ Adjustable Load Sense (100-220 psid), PC Override	③
D	Power Limiter w/ Adjustable Load Sense (225-350 psid), PC Override	③

13e = POWER SETTING
Blank unless required option Example: 070 = 70 HP Input @ 1800 RPM

LEGEND
① Only available in 011, 014 & 022 displacements
② Only available in 064 , 076, 098 & 130 displacements.
③ Only available with Control Option 1
④ Not available with Control Option 2
⑤ Not available with "P" seals
⑥ Only available with valve plate type "SA"
⑦ Only available with valve plate type "DF"

12 = VOLUME STOPS	
NN	No Volume Stop
SN	Adjustable Maximum Volume Stop
SA	Adjustable MinimumVolume Stop
SB	Adjustable Min. & Max. Volume Stops

13 = AUXILIARY ADAPTERS	
Required for all thru-shaft units **Leave blank for all rear port units**	
NN	None
CP	Cover Plate
AN	SAE A, 2-Bolt Adapter SAE A Splined Coupling, 9 Tooth
BN	SAE B, 2-Bolt Adapter SAE B Splined Coupling, 13 Tooth
CN	SAE C 2-Bolt Adapter SAE C Splined Coupling, 14 Tooth

14 = GEAR PUMPS		
Blank unless required option **Requires AN Adapter**		
05	8 ml/rev. (0.488 cipr)	⑤
07	11 ml/rev. (0.671 cipr)	⑤
10	16 ml/rev. (0.976 cipr)	⑤
14	23 ml/rev. (1.404 cipr)	⑤
20	33 ml/rev. (2.014 cipr)	⑤

15 = SPECIAL PUMP MOD
Assigned by factory if necessary

For non-standard requests, please contact technical sales.
Subject to change without notice.

PVWJ-011 | FRAME SIZE: A - DISPLACEMENT: 10.8 CC/REV

PERFORMANCE DATA

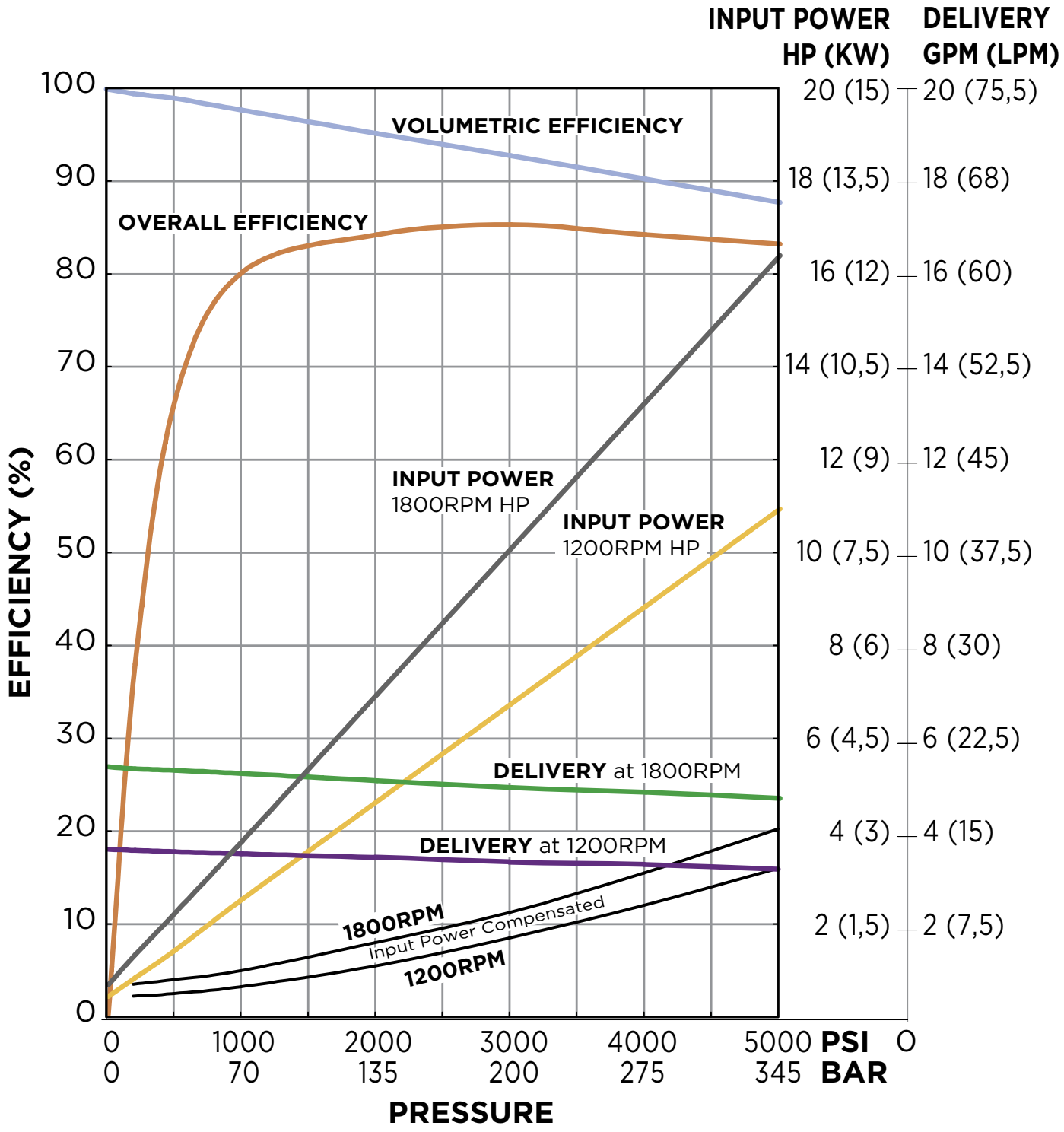

PVWJ-011 | FRAME SIZE: A - DISPLACEMENT: 10.8 CC/REV

DIMENSIONS Inches [mm]

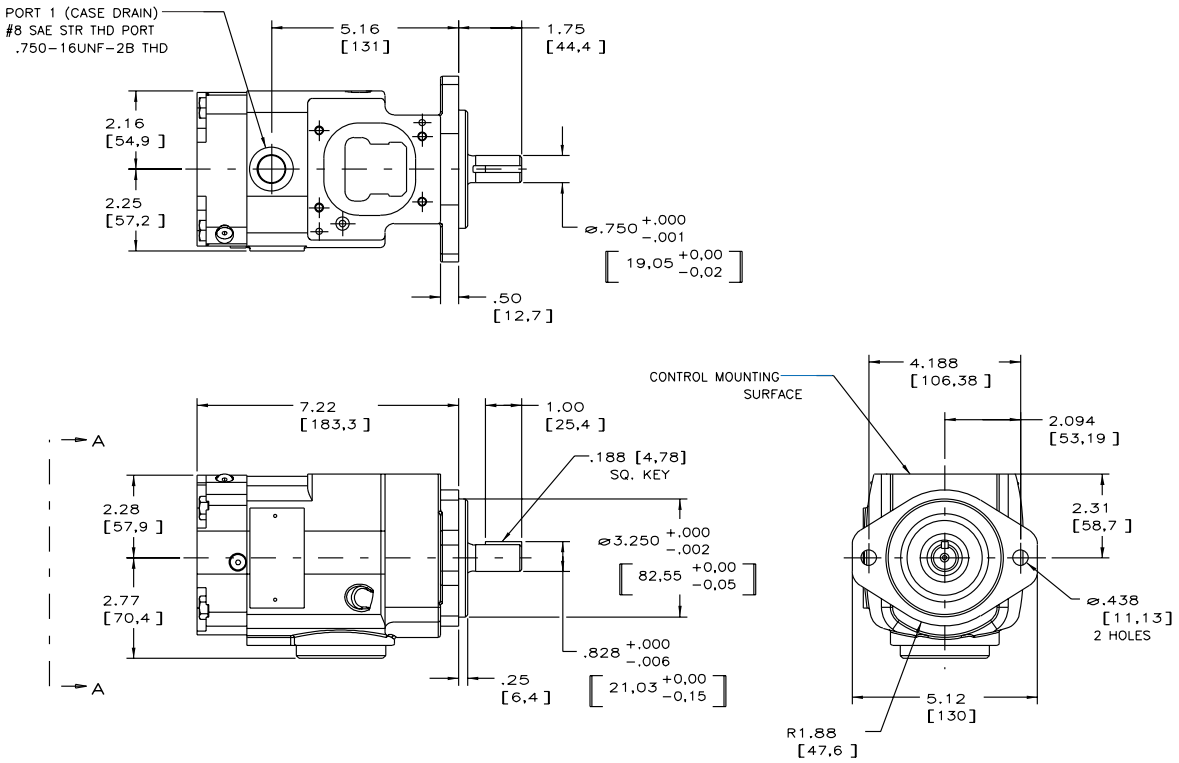

INLET DATA

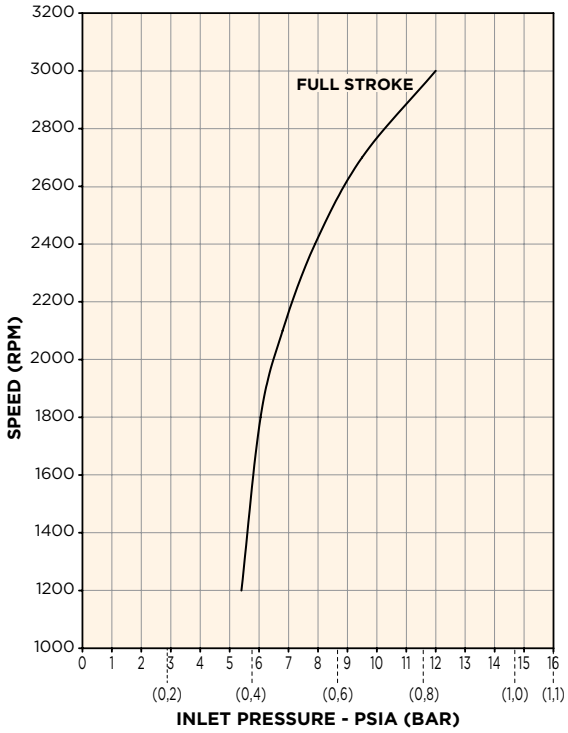

SOUND DATA Full Stroke

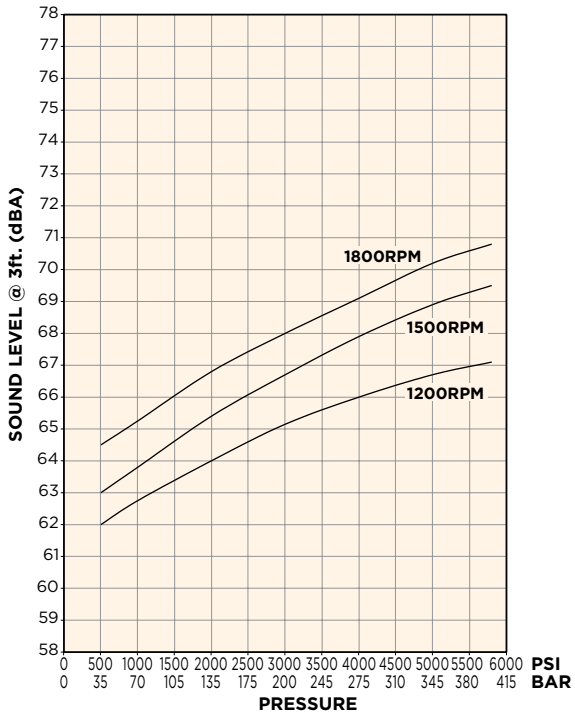

INSTALLATION DRAWING: BASIC PUMP • TOP/BOTTOM PORTED - THRU SHAFT

CONNECTION TABLE	
PORT	**FITTING**
INLET	#16 SAE Threaded Port
OUTLET	#12 SAE Threaded Port
CASE DRAIN (1 LOCATION)	#8 SAE Threaded Port

SHAFT TORQUE RATINGS		
MODEL CODE DESIGNATOR	**SHAFT SIZE**	**ALLOWANCE INPUT TORQUE, IN - LBS**
Y	Keyed, SAE A, 0.750″ DIA	1,290
S	Splined, SAE A, 9T, 16/32 Pitch	1,290

SAE "A" KEYED SHAFT
CODE "Y"

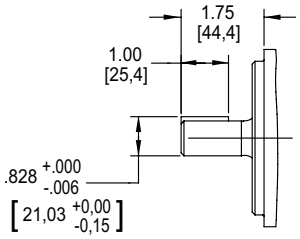

KEYED SHAFT
Ø.750-.001 [19,05-,025]
W/ .188 [4,77] SQ. KEY

SAE "A" SPLINE SHAFT
CODE "S"

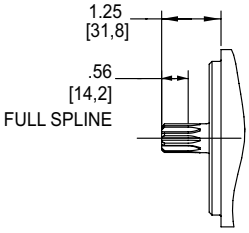

SPLINE SHAFT
SAE INVOLUTE SPLINE
9 TEETH, 16/32 PITCH
Ø.611 [15,52] MAJOR DIA

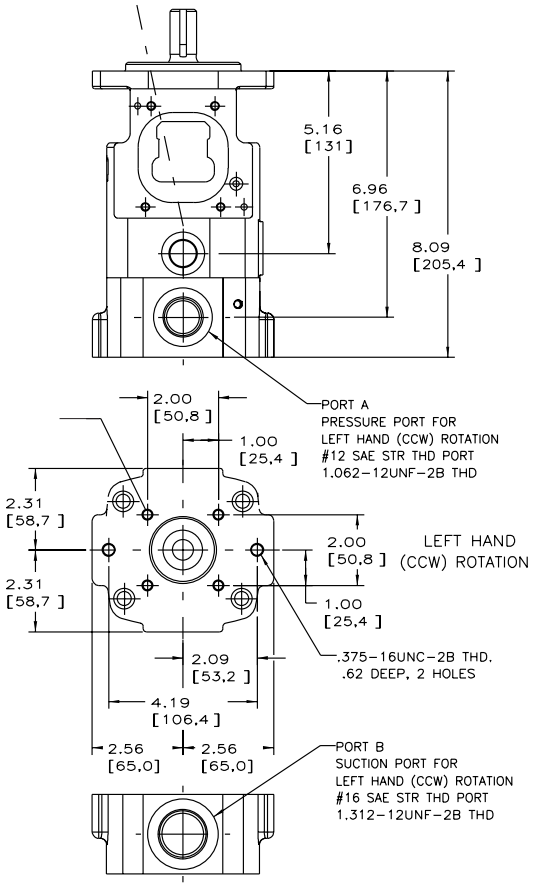

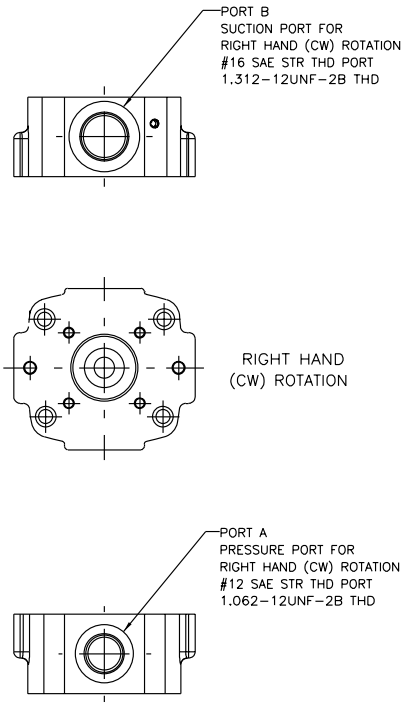

INSTALLATION DRAWING: BASIC PUMP • REAR PORTED

CONNECTION TABLE	
PORT	**FITTING**
INLET	#12 SAE Threaded Port
OUTLET	#10 SAE Threaded Port
CASE DRAIN (1 LOCATION)	#8 SAE Threaded Port

SHAFT TORQUE RATINGS		
MODEL CODE DESIGNATOR	**SHAFT SIZE**	**ALLOWANCE INPUT TORQUE, IN - LBS**
Y	Keyed, SAE A, 0.750" DIA	1,290
S	Splined, SAE A, 9T, 16/32 Pitch	1,290
D	Splined, SAE A, 9T, 16/32 Pitch, Industrial Version of "S"	1,290
C	Splined, SAE B, 13T, 16/32 Pitch	1,290

SAE "B" SPLINE SHAFT CODE "C"

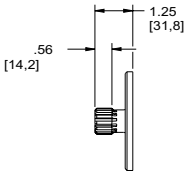

SPLINE SHAFT
SAE INVOLUTE SPLINE
13 TEETH, 16/32 PITCH
.859 [21,82] MAJOR DIA.

SAE "A" SPLINE SHAFT CODE "S"

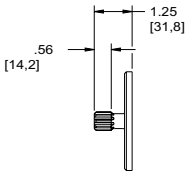

SPLINE SHAFT
SAE INVOLUTE SPLINE
9 TEETH, 16/32 PITCH
.610 [15,49] MAJOR DIA.

SAE "A" SPLINE SHAFT CODE "D"

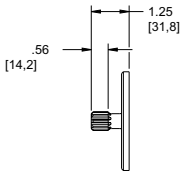

SPLINE SHAFT
SAE INVOLUTE SPLINE
9 TEETH, 16/32 PITCH
.625 [15,88] MAJOR DIA.
(INDUSTRIAL VERSION)

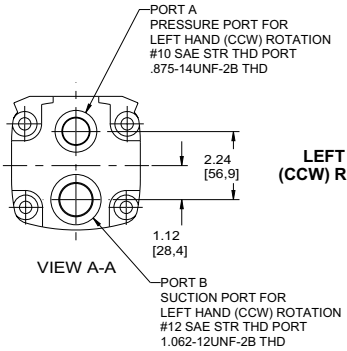

LEFT HAND (CCW) ROTATION

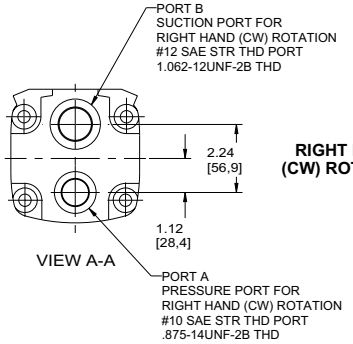

RIGHT HAND (CW) ROTATION

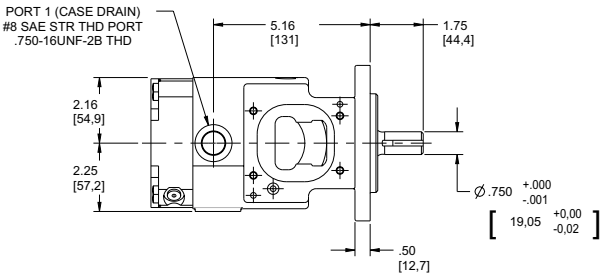

NOTES:

1) THIS DRAWING SHOWS THE CODE "Y" SHAFT.
SAE A KEYED, Ø .750 DIA.

2) PUMPS ARE DESIGNED FOR ONE-WAY SERVICE.

3) THESE UNITS ARE DESIGNED TO RUN CASE FULL OF FLUID AT ALL TIMES. FILL CASE BEFORE STARTING AND CONNECT DRAIN LINES ACCORDINGLY.

4) NUMERICAL DIMENSIONS GIVEN IN INCHES/[MM].

5) NET WEIGHT- 26 LBS. [11,8 KG).

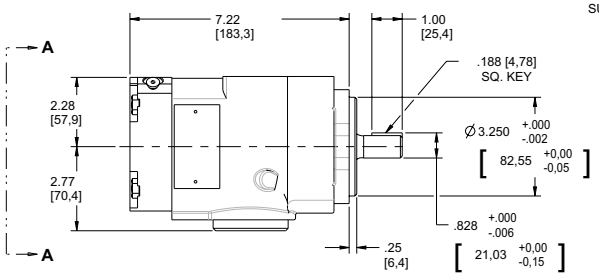

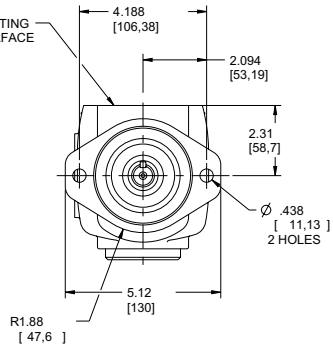

PERFORMANCE DATA

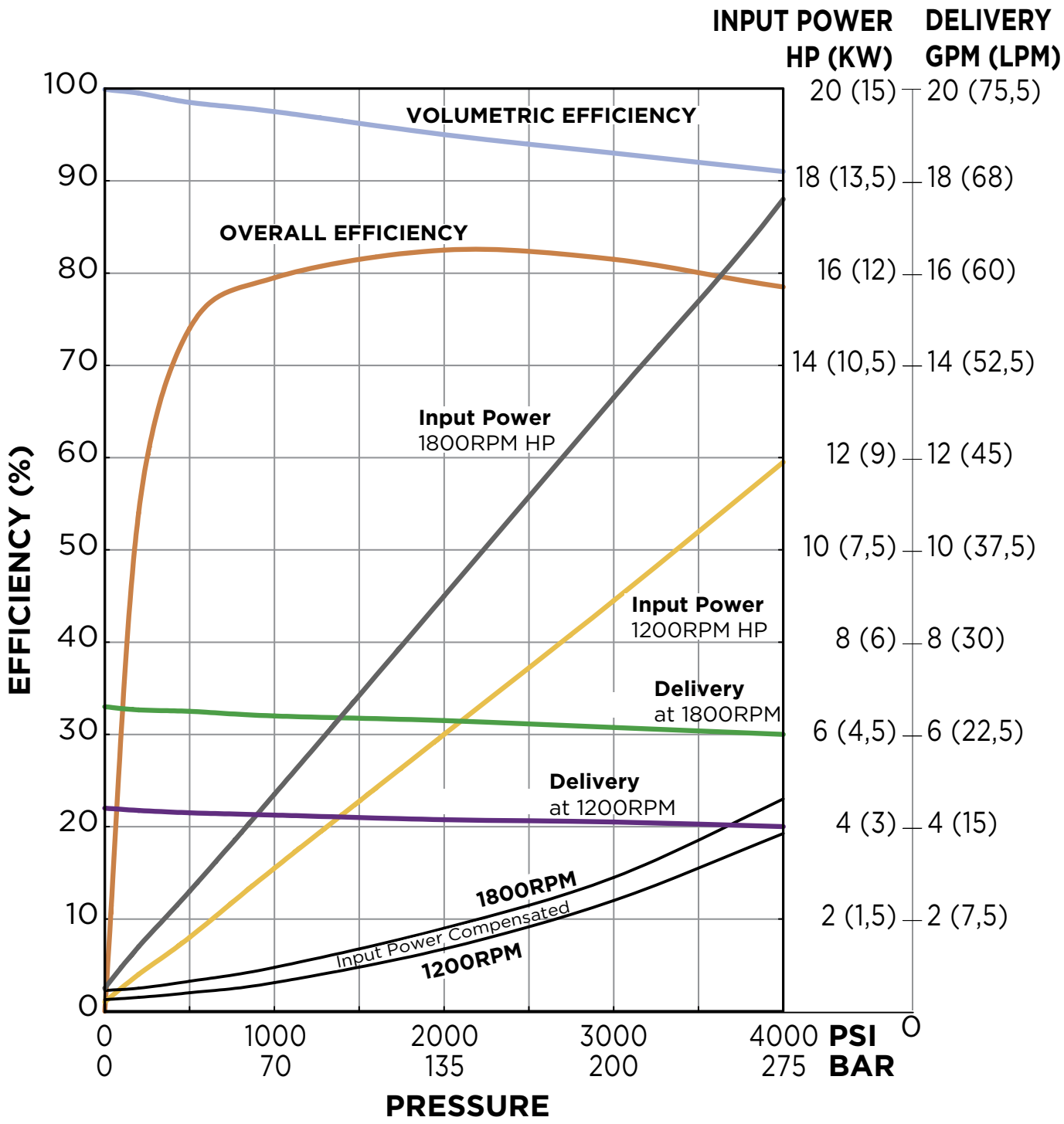

PVWJ-014 | FRAME SIZE: A - DISPLACEMENT: 14.1 CC/REV

DIMENSIONS Inches [mm]

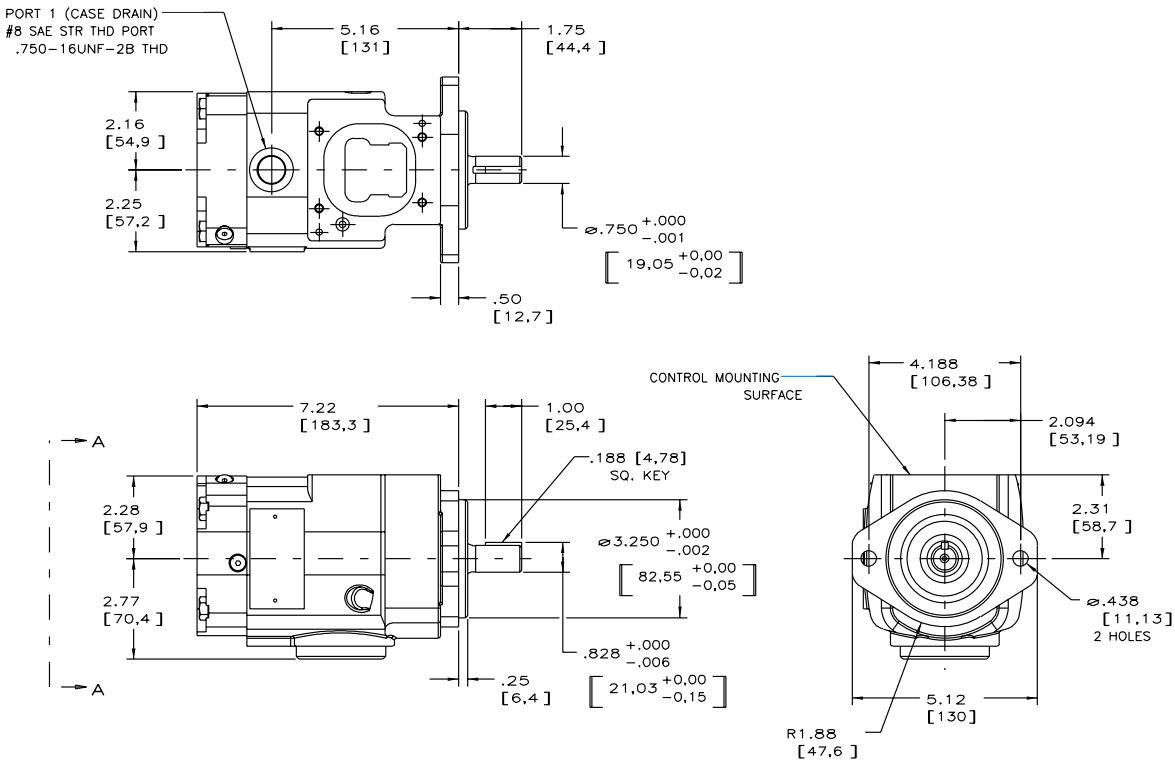

INLET DATA

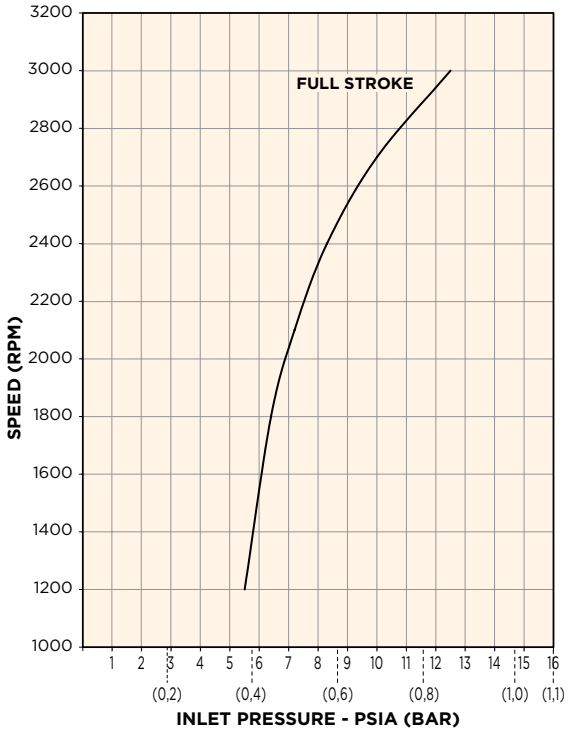

SOUND DATA Full Stroke

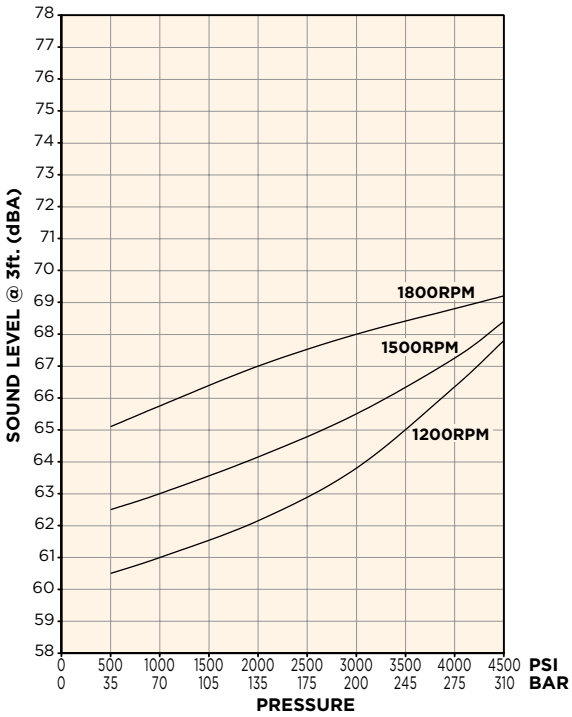

INSTALLATION DRAWING: BASIC PUMP • TOP/BOTTOM PORTED - THRU SHAFT

CONNECTION TABLE	
PORT	**FITTING**
INLET	#16 SAE Threaded Port
OUTLET	#12 SAE Threaded Port
CASE DRAIN (1 LOCATION)	#8 SAE Threaded Port

SHAFT TORQUE RATINGS		
MODEL CODE DESIGNATOR	**SHAFT SIZE**	**ALLOWANCE INPUT TORQUE, IN - LBS**
Y	Keyed, SAE A, 0.750″ DIA	1,290
S	Splined, SAE A, 9T, 16/32 Pitch	1,290

SAE "A" KEYED SHAFT CODE "Y"

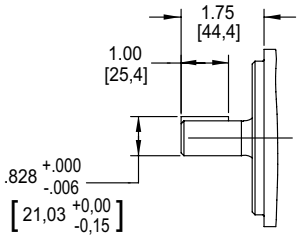

KEYED SHAFT
Ø.750-.001 [19,05-,025]
W/ .188 [4,77] SQ. KEY

SAE "A" SPLINE SHAFT CODE "S"

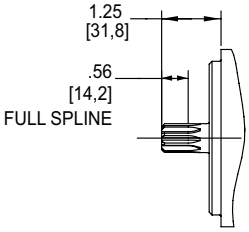

SPLINE SHAFT
SAE INVOLUTE SPLINE
9 TEETH, 16/32 PITCH
Ø.611 [15,52] MAJOR DIA

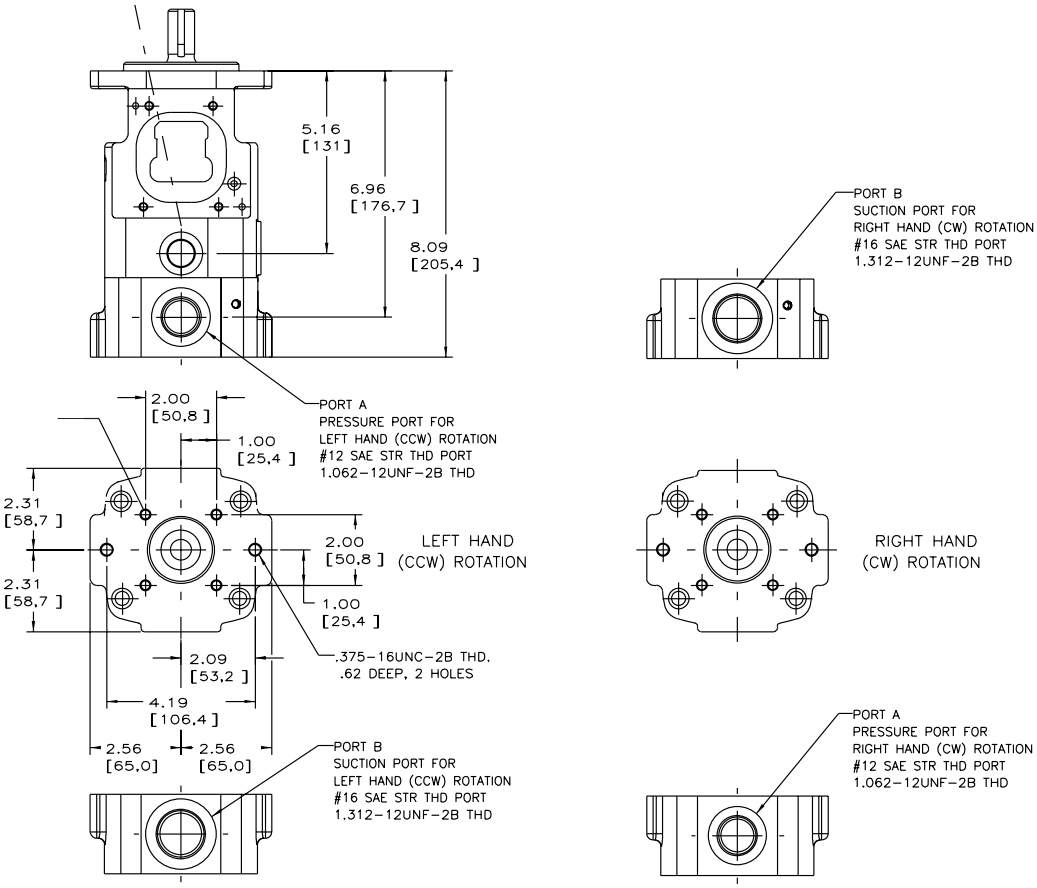

INSTALLATION DRAWING: BASIC PUMP • REAR PORTED

CONNECTION TABLE	
PORT	**FITTING**
INLET	#12 SAE Threaded Port
OUTLET	#8 SAE Threaded Port
CASE DRAIN (1 LOCATION)	#8 SAE Threaded Port

SHAFT TORQUE RATINGS		
MODEL CODE DESIGNATOR	**SHAFT SIZE**	**ALLOWANCE INPUT TORQUE, IN - LBS**
Y	Keyed, SAE A, 0.750″ DIA	1,290
S	Splined, SAE A, 9T, 16/32 Pitch	1,290
D	Splined, SAE A, 9T, 16/32 Pitch, Industrial Version of "S"	1,290
C	Splined, SAE B, 13T, 16/32 Pitch	1,290

SAE "B" SPLINE SHAFT CODE "C"

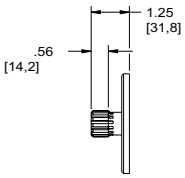

SPLINE SHAFT
SAE INVOLUTE SPLINE
13 TEETH, 16/32 PITCH
.859 [21,82] MAJOR DIA.

SAE "A" SPLINE SHAFT CODE "S"

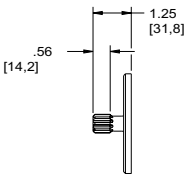

SPLINE SHAFT
SAE INVOLUTE SPLINE
9 TEETH, 16/32 PITCH
.610 [15,49] MAJOR DIA.

SAE "A" SPLINE SHAFT CODE "D"

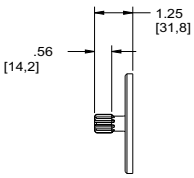

SPLINE SHAFT
SAE INVOLUTE SPLINE
9 TEETH, 16/32 PITCH
.625 [15,88] MAJOR DIA.
(INDUSTRIAL VERSION)

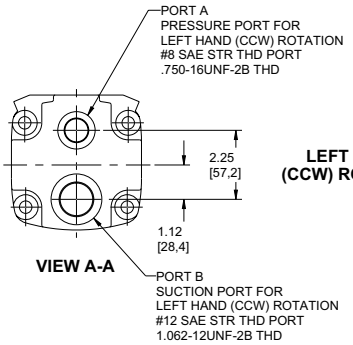

LEFT HAND (CCW) ROTATION

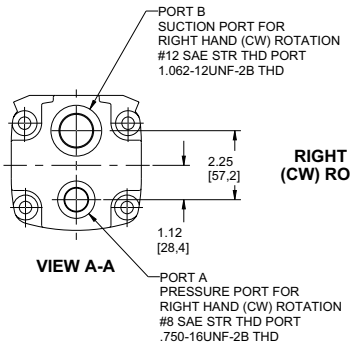

RIGHT HAND (CW) ROTATION

NOTES:

1) THIS DRAWING SHOWS THE CODE "Y" SHAFT.
SAE A KEYED, Ø .750 DIA.

2) PUMPS ARE DESIGNED FOR ONE-WAY SERVICE.

3) THESE UNITS ARE DESIGNED TO RUN CASE FULL OF FLUID AT ALL TIMES. FILL CASE BEFORE STARTING AND CONNECT DRAIN LINES ACCORDINGLY.

4) NUMERICAL DIMENSIONS GIVEN IN INCHES/[MM].

5) NET WEIGHT- 26 LBS. [11,8 KG].

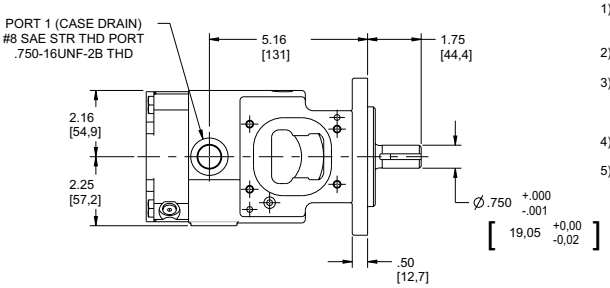

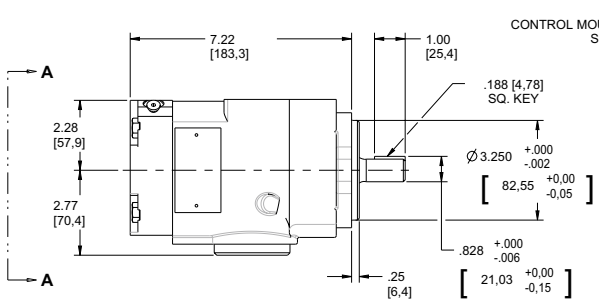

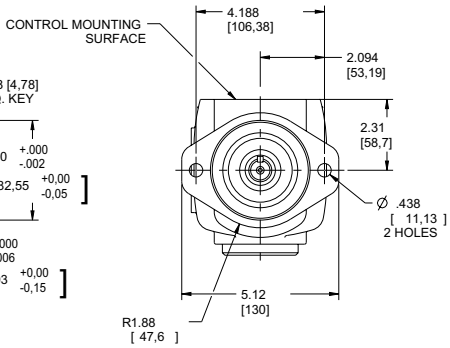

PERFORMANCE DATA

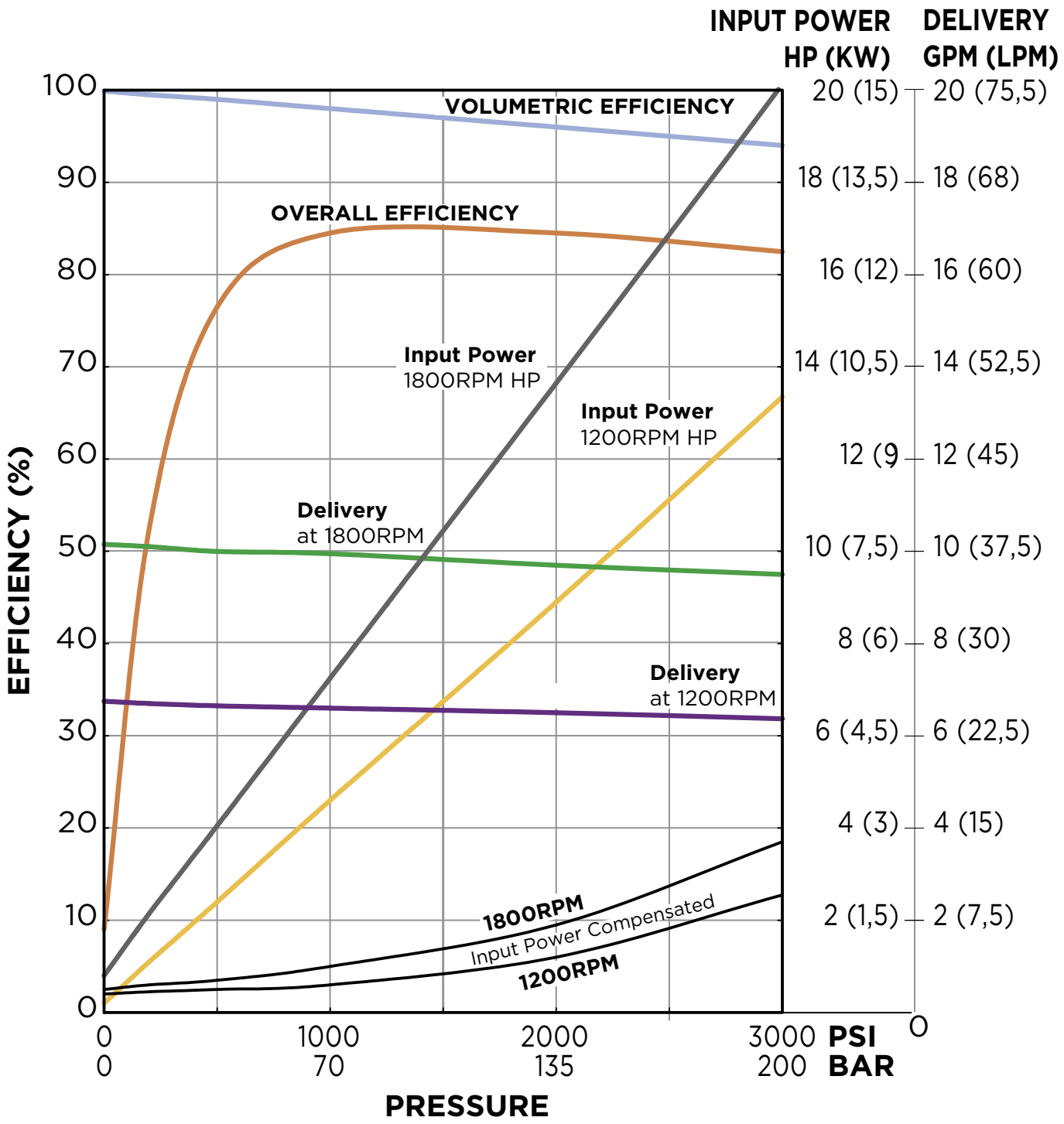

PVWJ-022 | FRAME SIZE: A - DISPLACEMENT: 22.1 CC/REV

DIMENSIONS Inches [mm]

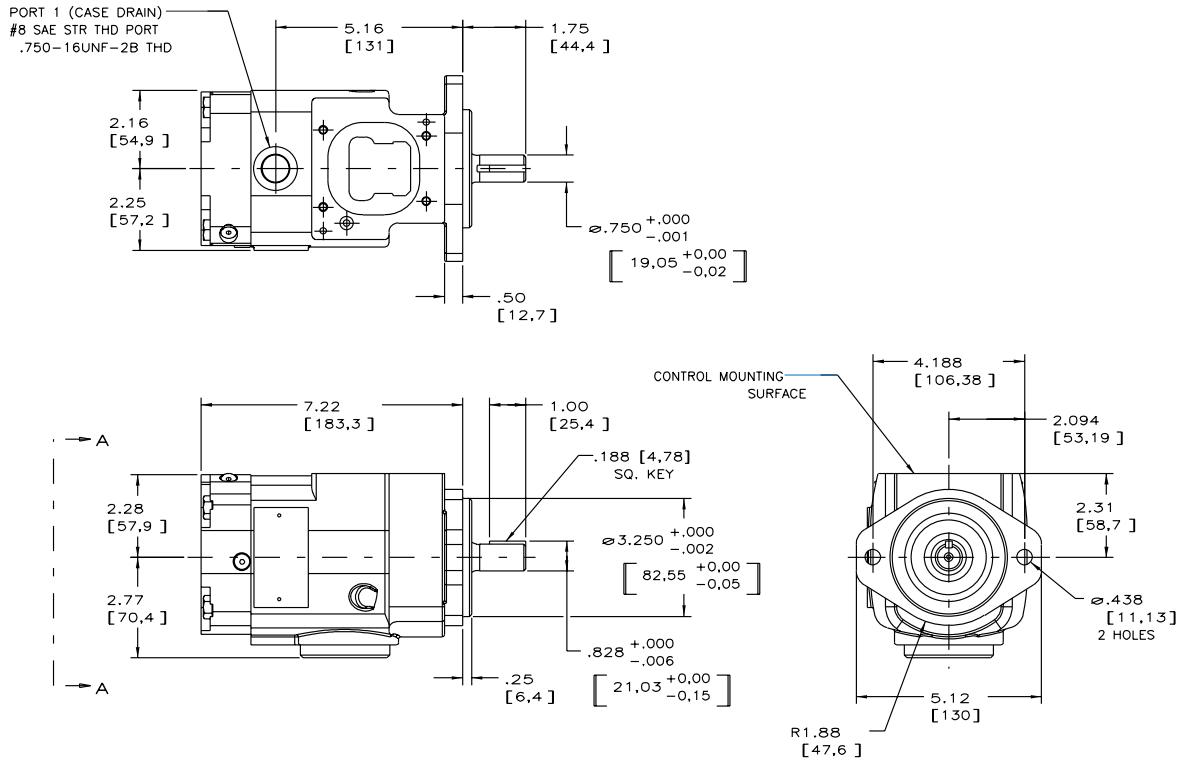

INLET DATA

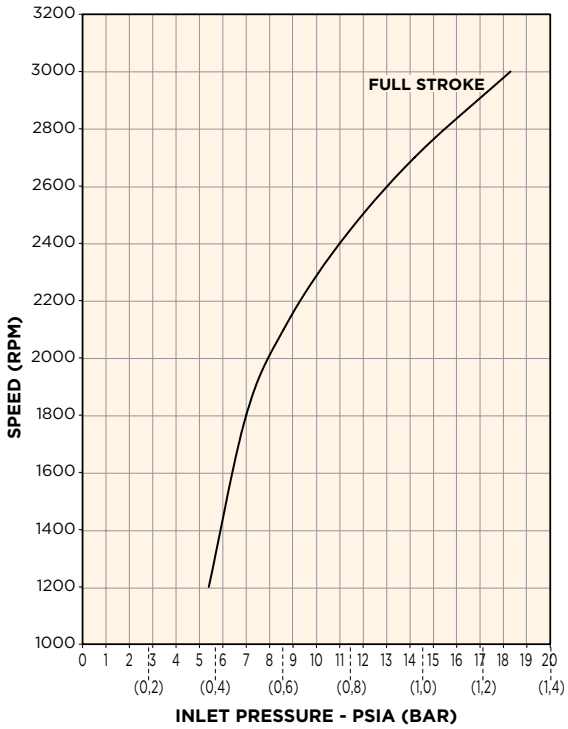

SOUND DATA Full Stroke

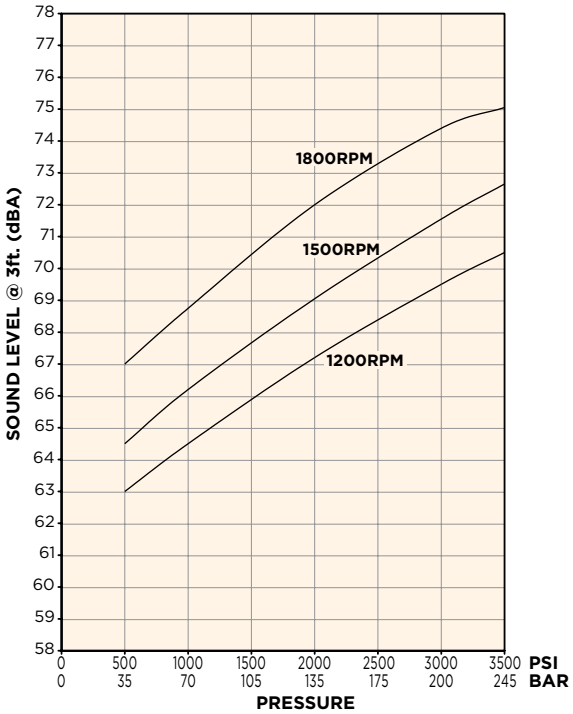

INSTALLATION DRAWING: BASIC PUMP • TOP/BOTTOM PORTED - THRU SHAFT

CONNECTION TABLE	
PORT	**FITTING**
INLET	#16 SAE Threaded Port
OUTLET	#12 SAE Threaded Port
CASE DRAIN (1 LOCATION)	#8 SAE Threaded Port

SHAFT TORQUE RATINGS		
MODEL CODE DESIGNATOR	**SHAFT SIZE**	**ALLOWANCE INPUT TORQUE, IN - LBS**
Y	Keyed, SAE A, 0.750″ DIA	1,290
S	Splined, SAE A, 9T, 16/32 Pitch	1,290

SAE "A" KEYED SHAFT
CODE "Y"

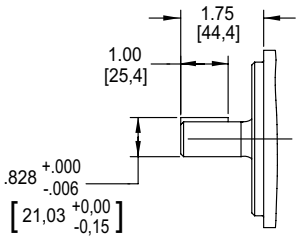

KEYED SHAFT
Ø.750-.001 [19,05-,025]
W/ .188 [4,77] SQ. KEY

SAE "A" SPLINE SHAFT
CODE "S"

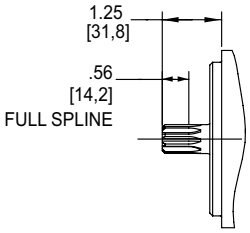

SPLINE SHAFT
SAE INVOLUTE SPLINE
9 TEETH, 16/32 PITCH
Ø.611 [15,52] MAJOR DIA

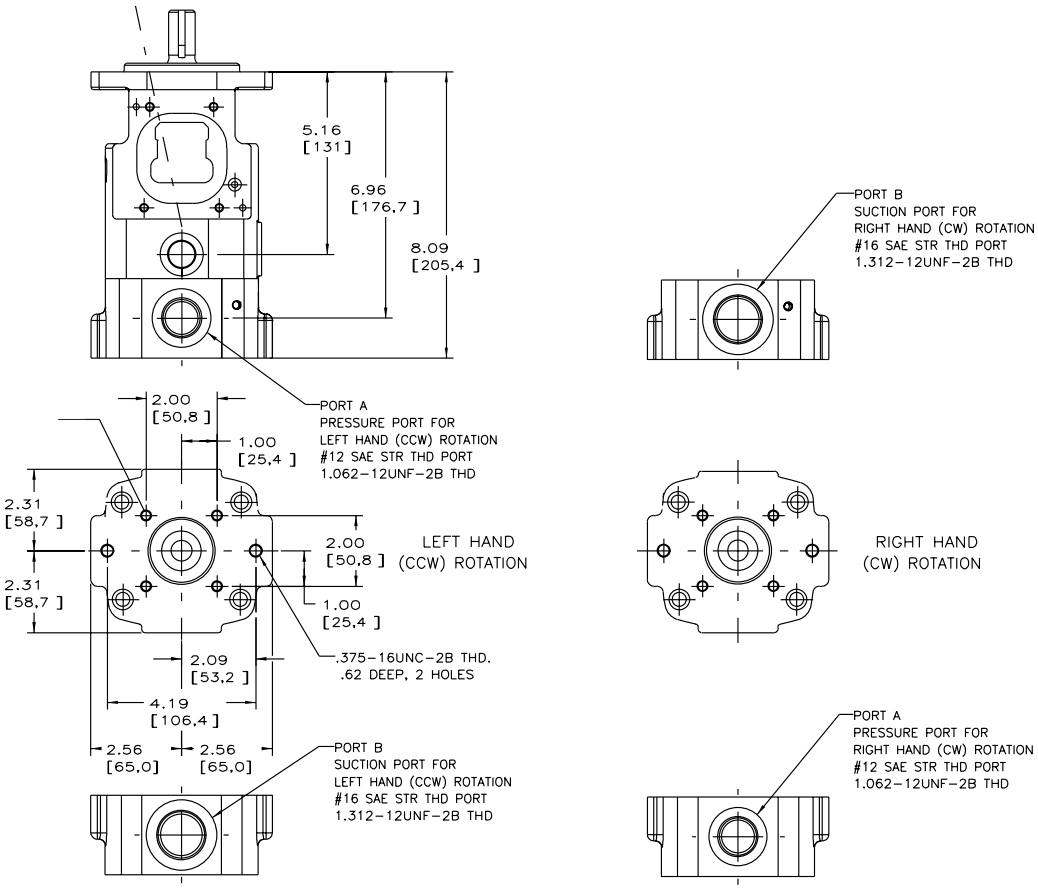

INSTALLATION DRAWING: BASIC PUMP • REAR PORTED

CONNECTION TABLE	
PORT	**FITTING**
INLET	#12 SAE Threaded Port
OUTLET	#8 SAE Threaded Port
CASE DRAIN (1 LOCATION)	#8 SAE Threaded Port

SHAFT TORQUE RATINGS		
MODEL CODE DESIGNATOR	**SHAFT SIZE**	**ALLOWANCE INPUT TORQUE, IN - LBS**
Y	Keyed, SAE A, 0.750" DIA	1,290
S	Splined, SAE A, 9T, 16/32 Pitch	1,290
D	Splined, SAE A, 9T, 16/32 Pitch, Industrial Version of "S"	1,290
C	Splined, SAE B, 13T, 16/32 Pitch	1,290

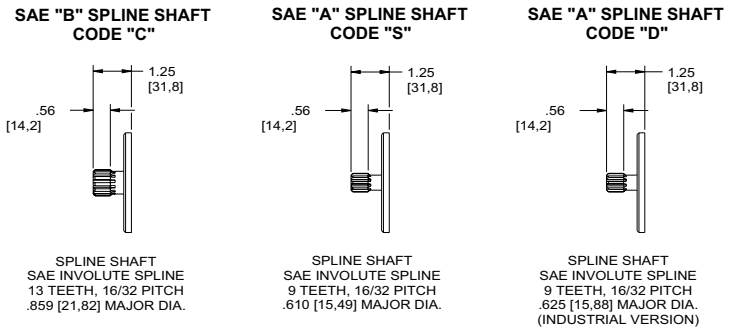

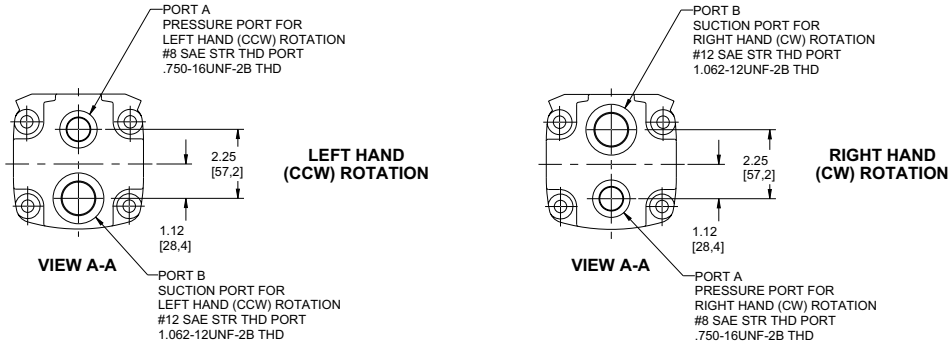

NOTES:

1) THIS DRAWING SHOWS THE CODE "Y" SHAFT. SAE A KEYED, Ø.750 DIA.

2) PUMPS ARE DESIGNED FOR ONE-WAY SERVICE.

3) THESE UNITS ARE DESIGNED TO RUN CASE FULL OF FLUID AT ALL TIMES. FILL CASE BEFORE STARTING AND CONNECT DRAIN LINES ACCORDINGLY.

4) NUMERICAL DIMENSIONS GIVEN IN INCHES/[MM].

5) NET WEIGHT- 26 LBS. [11,8 KG].

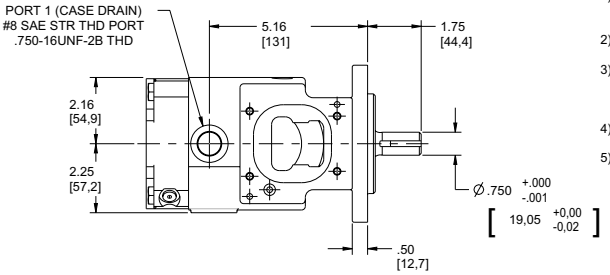

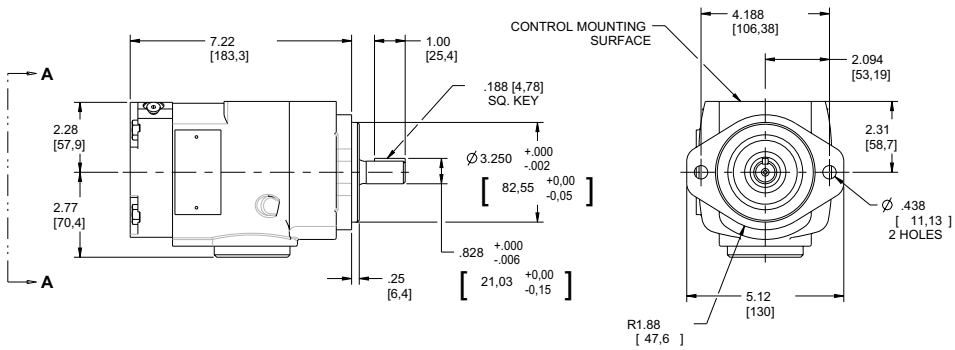

PERFORMANCE DATA

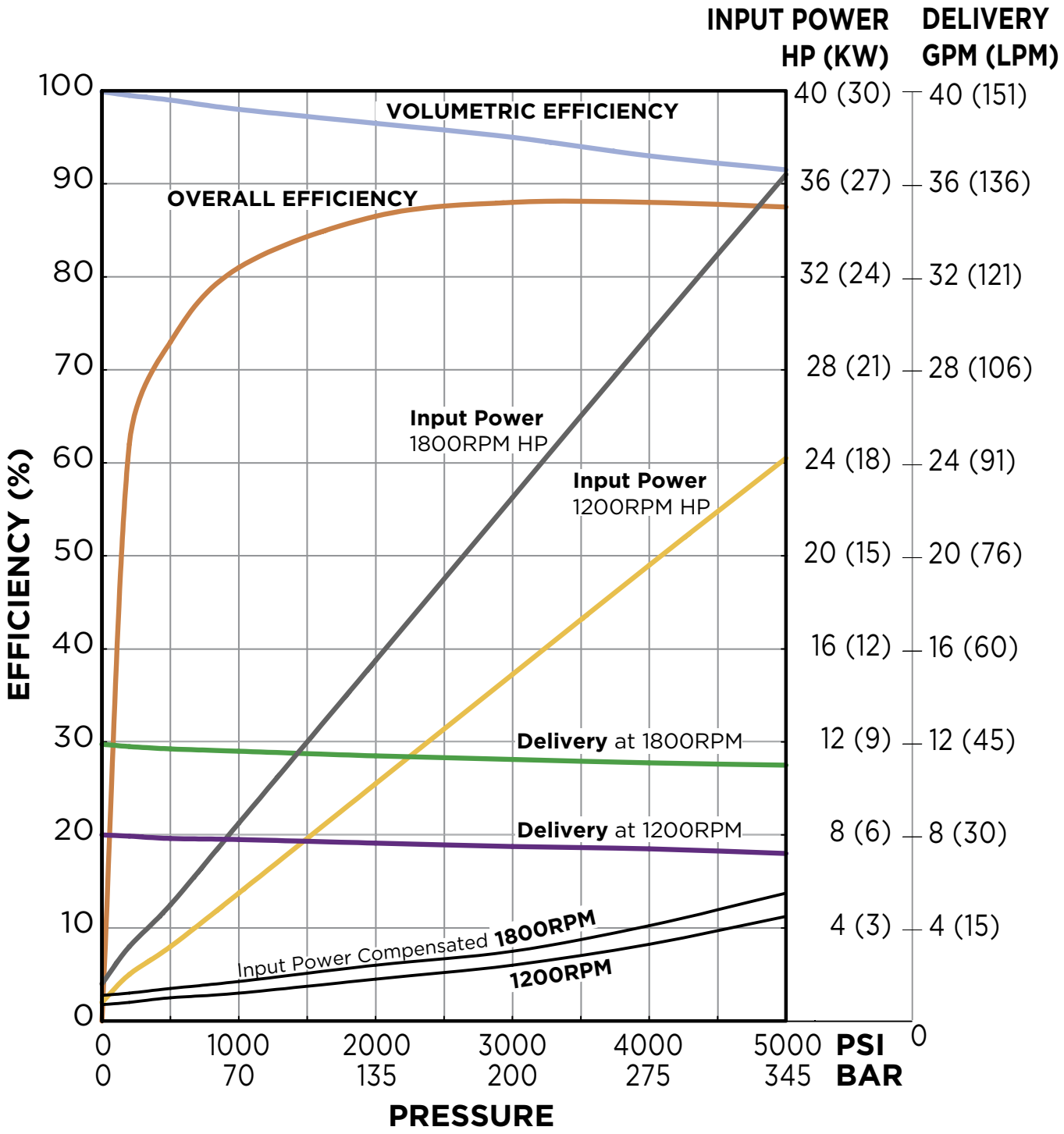

PVWJ-025 | FRAME SIZE: B - DISPLACEMENT: 25.4 CC/REV

DIMENSIONS Inches [mm]

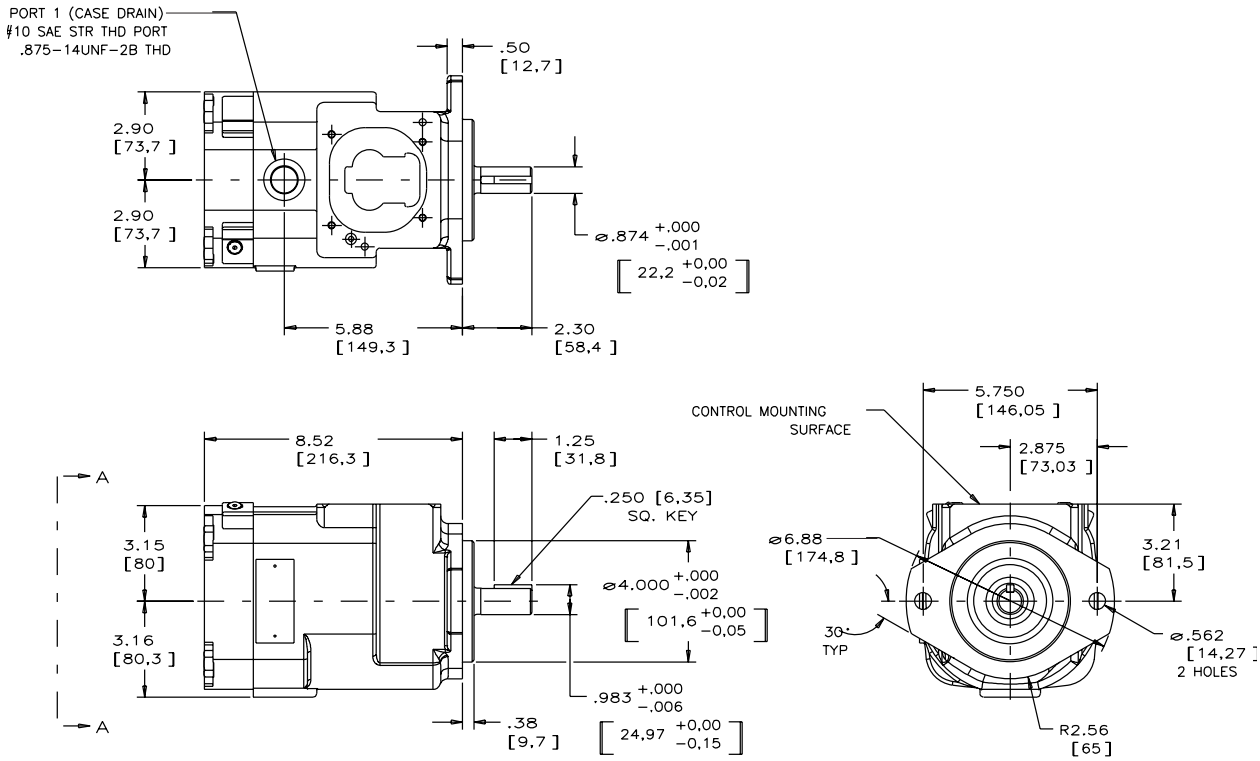

INLET DATA

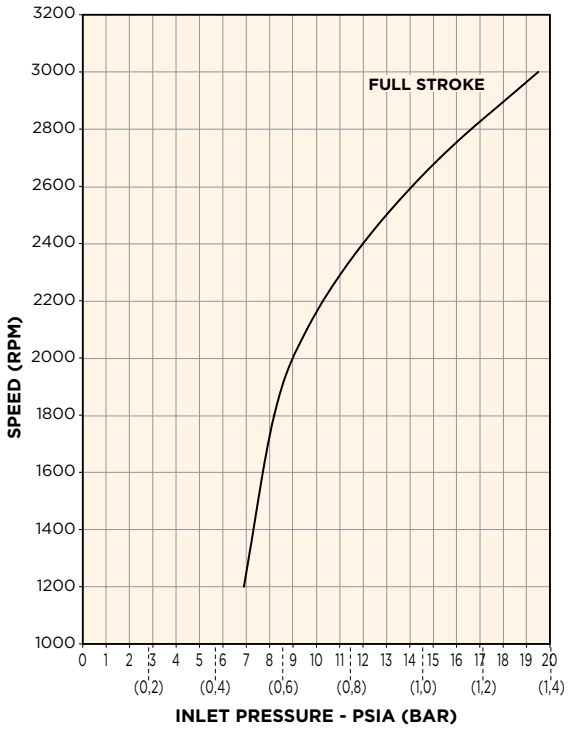

SOUND DATA Full Stroke

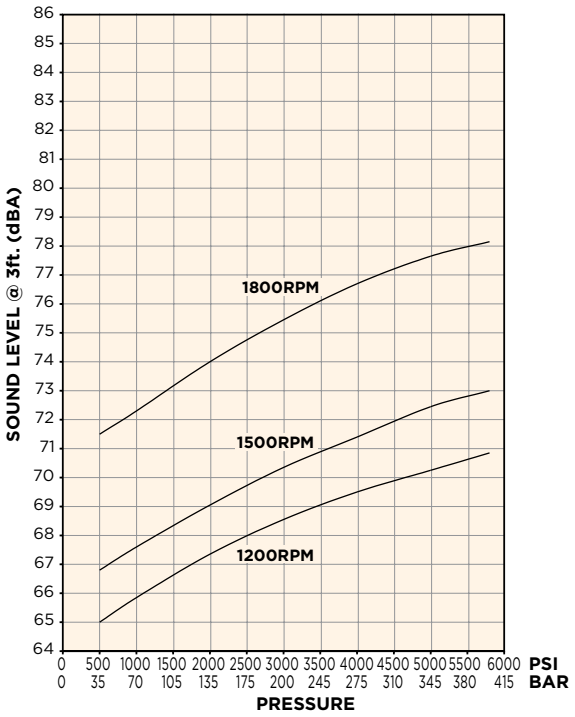

INSTALLATION DRAWING: BASIC PUMP • TOP/BOTTOM PORTED - THRU SHAFT

CONNECTION TABLE	
PORT	**FITTING**
INLET	1.00″ Code 62
OUTLET	1.00″ Code 62
CASE DRAIN (1 LOCATION)	#10 SAE Threaded Port

SHAFT TORQUE RATINGS		
MODEL CODE DESIGNATOR	**SHAFT SIZE**	**ALLOWANCE INPUT TORQUE, IN - LBS**
Y	Keyed, SAE B, 0.875″ DIA	2,250
S	Splined, SAE B, 13T, 16/32 Pitch	2,250
D	Splined, SAE B, 13T, 16/32 Pitch, Industrial Version of "S"	2,250

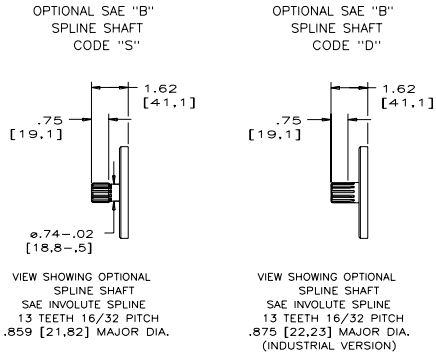

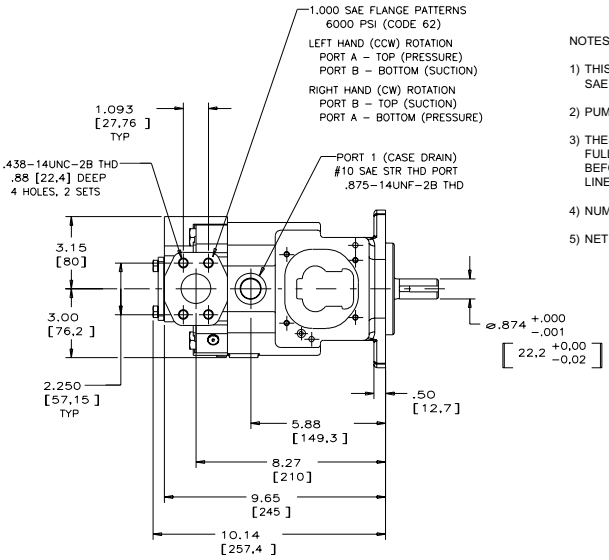

NOTES:

1) THIS DRAWING SHOWS THE "Y" MODEL SHAFT. SAE B KEY, 0.875" DIA.
2) PUMPS ARE DESIGNED FOR ONE-WAY SERVICE.
3) THESE UNITS ARE DESIGNED TO RUN CASE FULL OF FLUID AT ALL TIMES. FILL CASE BEFORE STARTING AND CONNECT DRAIN LINES ACCORDINGLY.
4) NUMERICAL DIMENSIONS GIVEN IN INCHES/[MM].
5) NET WEIGHT - 58 LBS. [26,31 KG].

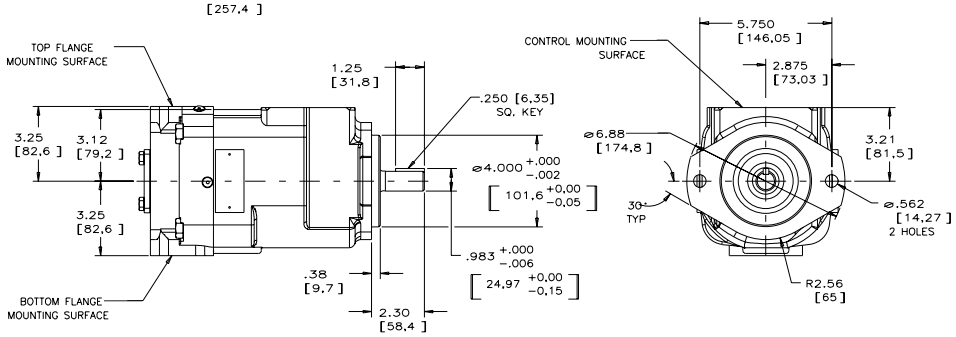

INSTALLATION DRAWING: BASIC PUMP • REAR PORTED

CONNECTION TABLE	
PORT	**FITTING**
INLET	#20 SAE Threaded Port
OUTLET	#16 SAE Threaded Port
CASE DRAIN (1 LOCATION)	#10 SAE Threaded Port

SHAFT TORQUE RATINGS		
MODEL CODE DESIGNATOR	**SHAFT SIZE**	**ALLOWANCE INPUT TORQUE, IN - LBS**
Y	Keyed, SAE B, 0.875" DIA	2,250
S	Splined, SAE B, 13T, 16/32 Pitch	2,250

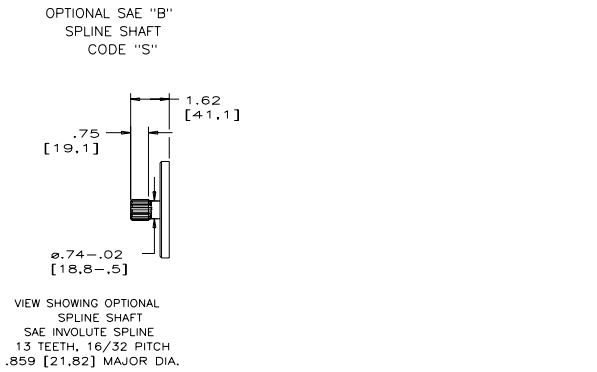

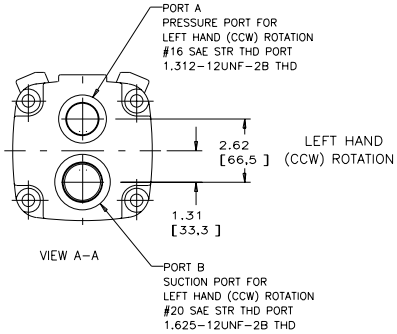

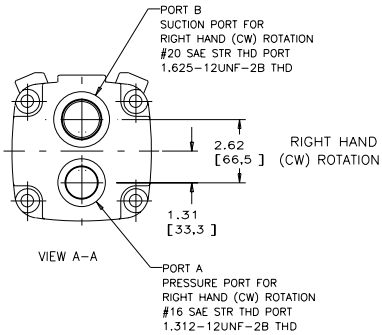

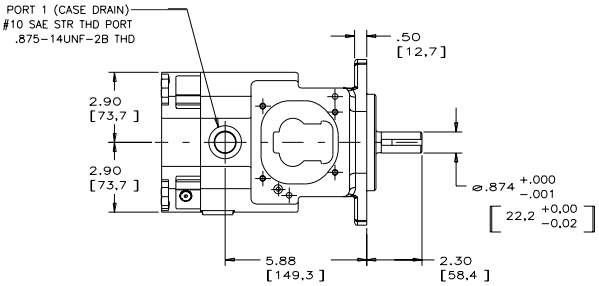

NOTES:

1) THIS DRAWING SHOWS THE "Y" MODEL SHAFT. SAE B KEY, 0.875" DIA.

2) PUMPS ARE DESIGNED FOR ONE-WAY SERVICE.

3) THESE UNITS ARE DESIGNED TO RUN CASE FULL OF FLUID AT ALL TIMES. FILL CASE BEFORE STARTING AND CONNECT DRAIN LINES ACCORDINGLY.

4) NUMERICAL DIMENSIONS GIVEN IN INCHES/[MM].

5) NET WEIGHT - 58 LBS. [26,31 KG].

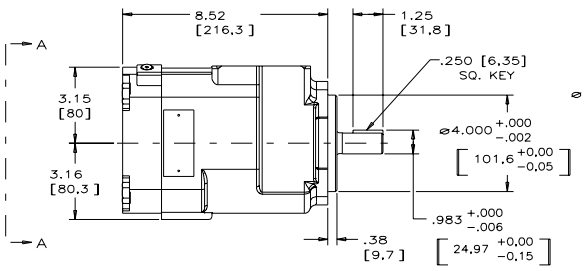

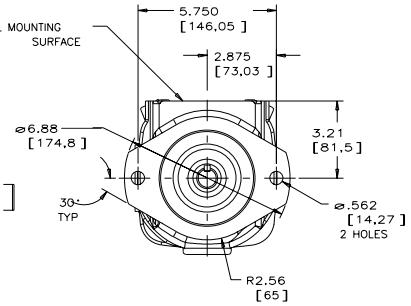

PERFORMANCE DATA

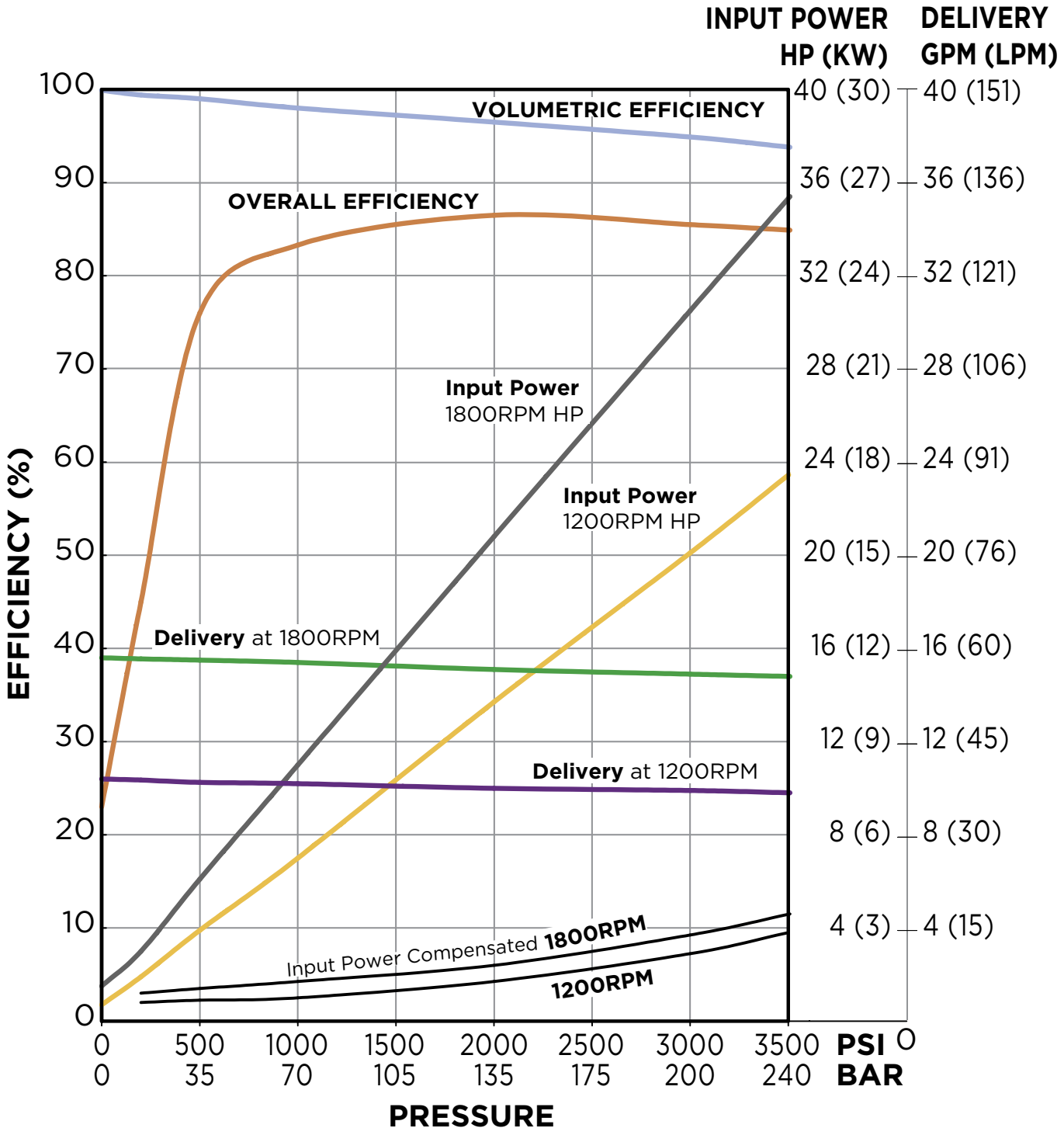

PVWJ-034 | FRAME SIZE: B - DISPLACEMENT: 33.8 CC/REV

DIMENSIONS Inches [mm]

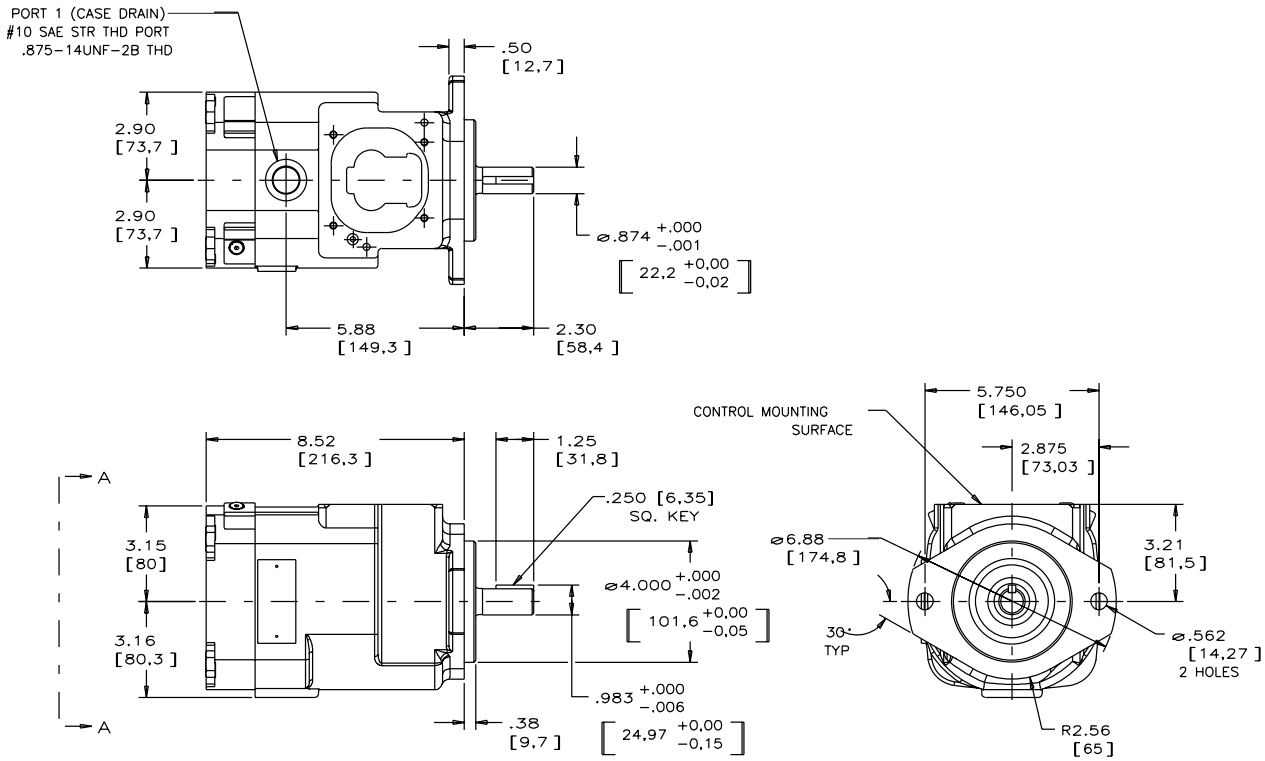

INLET DATA

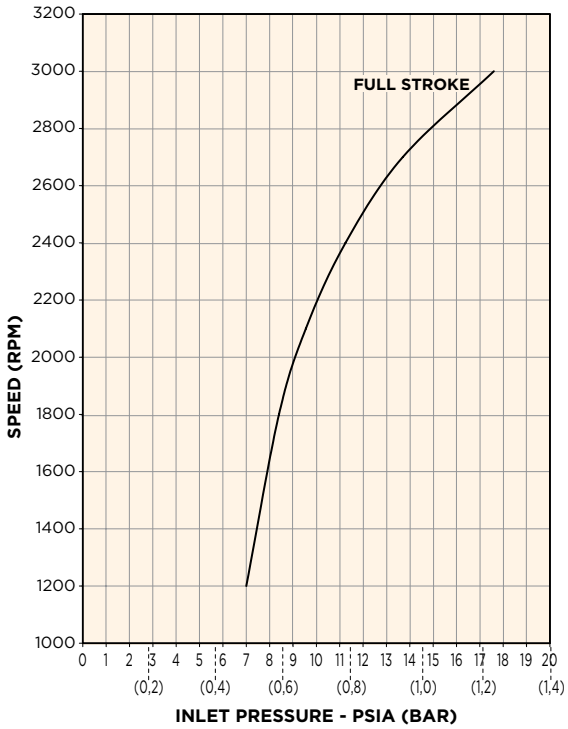

SOUND DATA Full Stroke

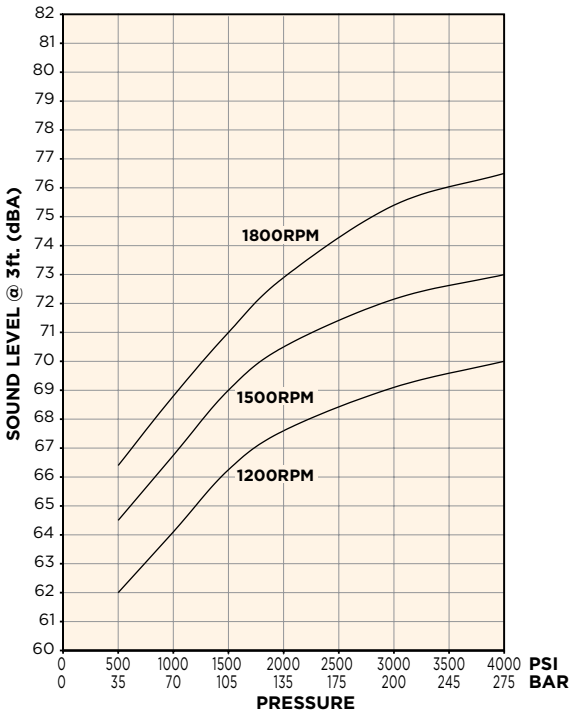

INSTALLATION DRAWING: BASIC PUMP • TOP/BOTTOM PORTED - THRU SHAFT

CONNECTION TABLE	
PORT	**FITTING**
INLET	1.25″ Code 61
OUTLET	1.25″ Code 61
CASE DRAIN (1 LOCATION)	#10 SAE Threaded Port

SHAFT TORQUE RATINGS		
MODEL CODE DESIGNATOR	**SHAFT SIZE**	**ALLOWANCE INPUT TORQUE, IN - LBS**
Y	Keyed, SAE B, 0.875″ DIA	2,250
S	Splined, SAE B, 13T, 16/32 Pitch	2,250
D	Splined, SAE B, 13T, 16/32 Pitch, Industrial Version of "S"	2,250

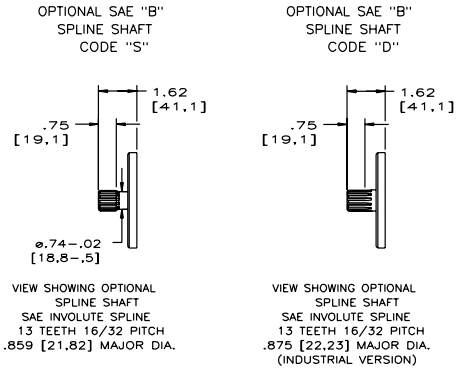

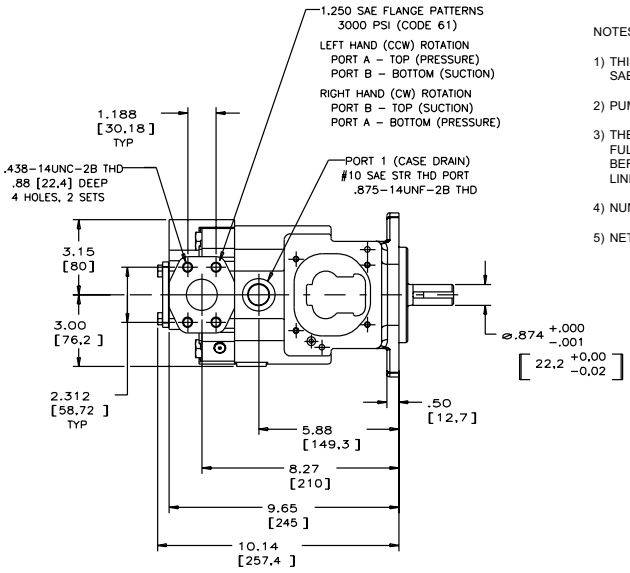

NOTES:

1) THIS DRAWING SHOWS THE "Y" MODEL SHAFT. SAE B KEY, 0.875" DIA.
2) PUMPS ARE DESIGNED FOR ONE-WAY SERVICE.
3) THESE UNITS ARE DESIGNED TO RUN CASE FULL OF FLUID AT ALL TIMES. FILL CASE BEFORE STARTING AND CONNECT DRAIN LINES ACCORDINGLY.
4) NUMERICAL DIMENSIONS GIVEN IN INCHES/[MM].
5) NET WEIGHT - 58 LBS. [26,31 KG].

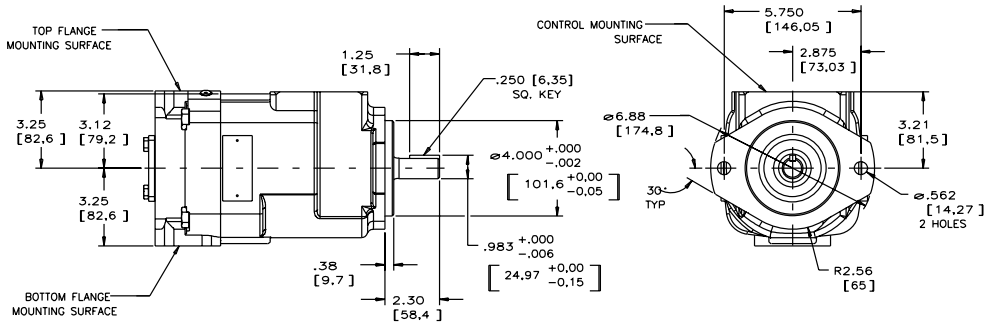

INSTALLATION DRAWING: BASIC PUMP • REAR PORTED

CONNECTION TABLE	
PORT	**FITTING**
INLET	#20 SAE Threaded Port
OUTLET	#16 SAE Threaded Port
CASE DRAIN (1 LOCATION)	#10 SAE Threaded Port

SHAFT TORQUE RATINGS		
MODEL CODE DESIGNATOR	**SHAFT SIZE**	**ALLOWANCE INPUT TORQUE, IN - LBS**
Y	Keyed, SAE B, 0.875" DIA	2,250
S	Splined, SAE B, 13T, 16/32 Pitch	2,250

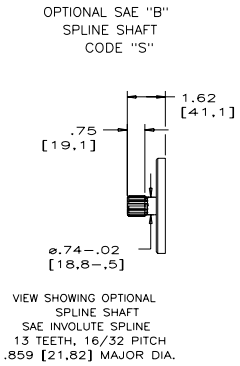

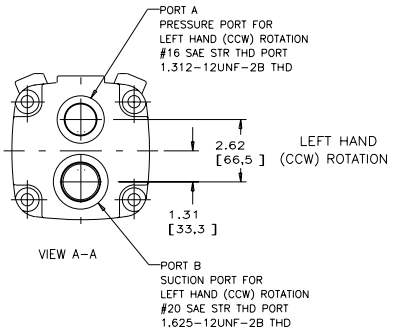

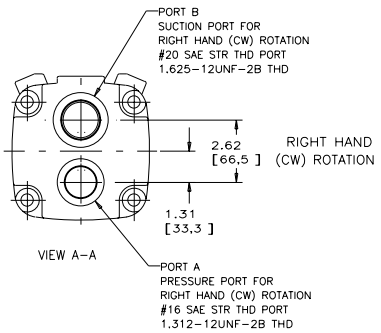

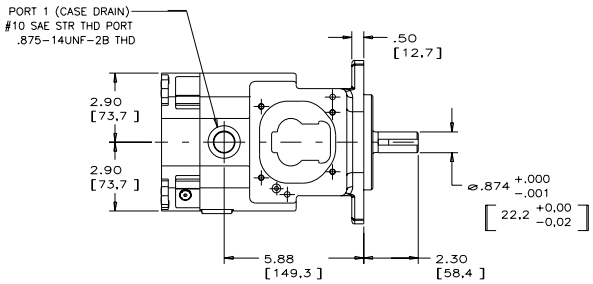

NOTES:

1) THIS DRAWING SHOWS THE "Y" MODEL SHAFT. SAE B KEY, 0.875" DIA.
2) PUMPS ARE DESIGNED FOR ONE-WAY SERVICE.
3) THESE UNITS ARE DESIGNED TO RUN CASE FULL OF FLUID AT ALL TIMES. FILL CASE BEFORE STARTING AND CONNECT DRAIN LINES ACCORDINGLY.
4) NUMERICAL DIMENSIONS GIVEN IN INCHES/[MM].
5) NET WEIGHT - 58 LBS. [26,31 KG].

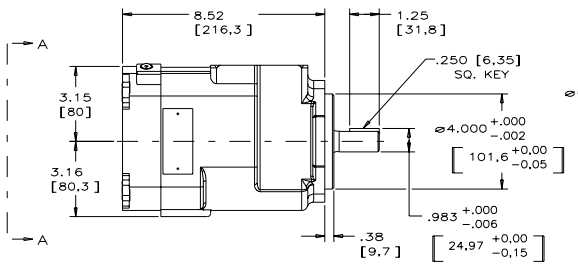

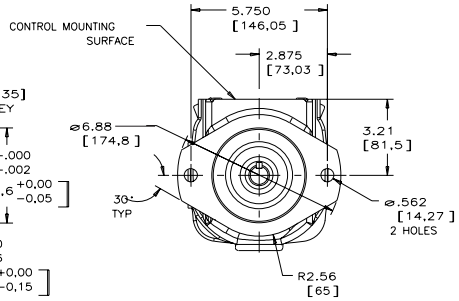

PERFORMANCE DATA

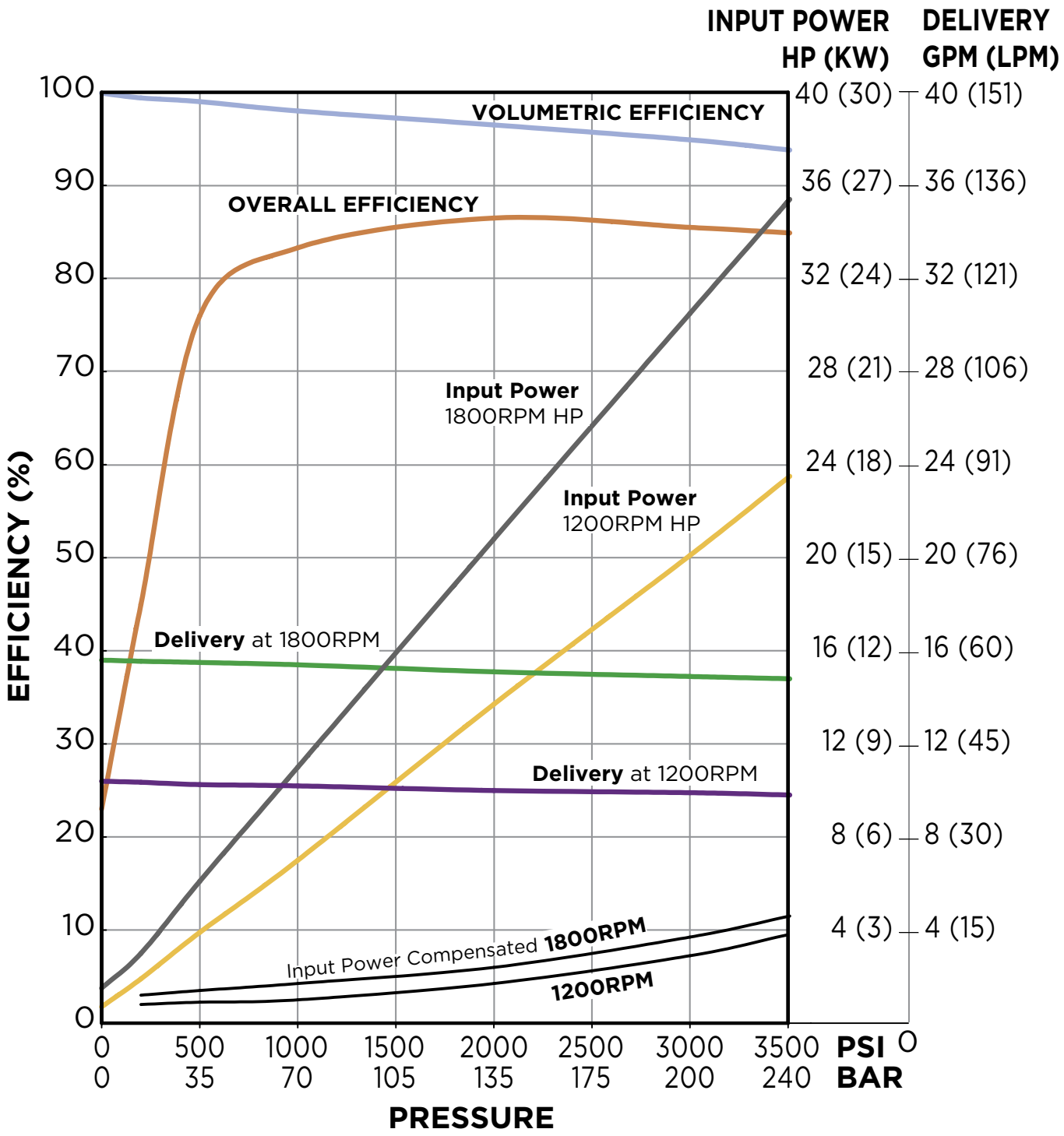

PVWJ-046 | FRAME SIZE: B - DISPLACEMENT: 46.4 CC/REV

DIMENSIONS Inches [mm]

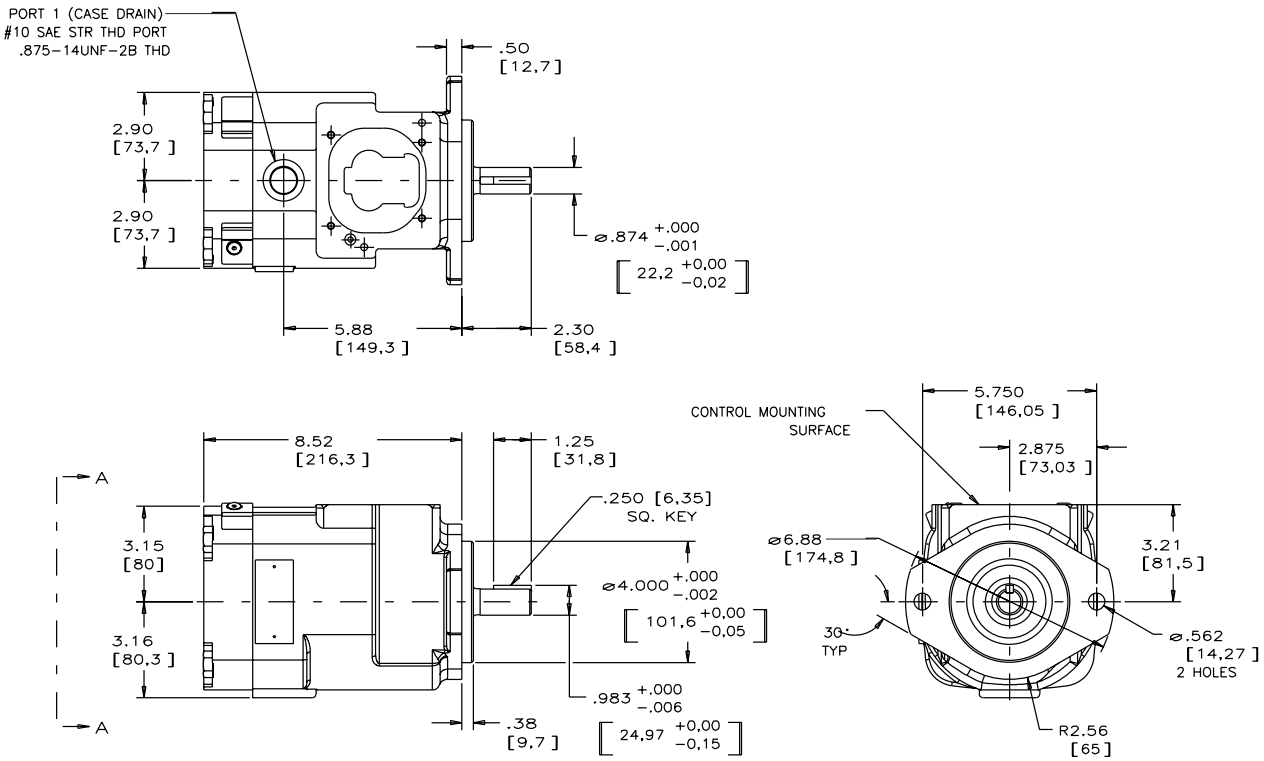

INLET DATA

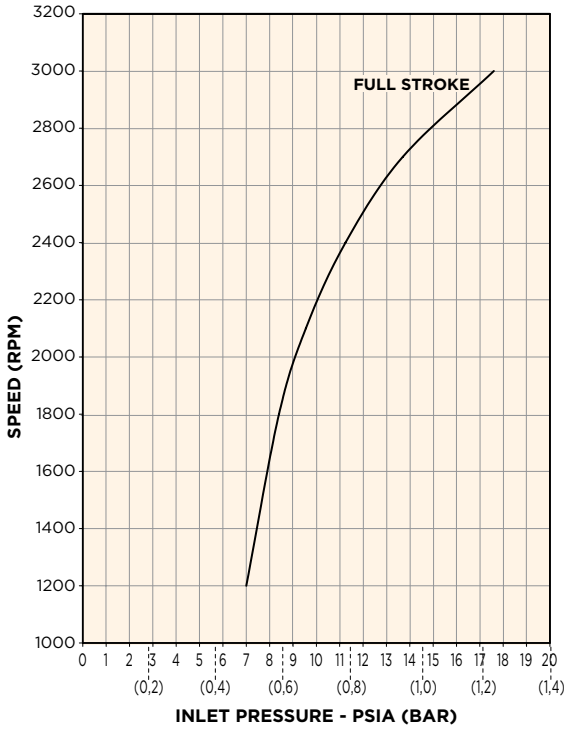

SOUND DATA Full Stroke

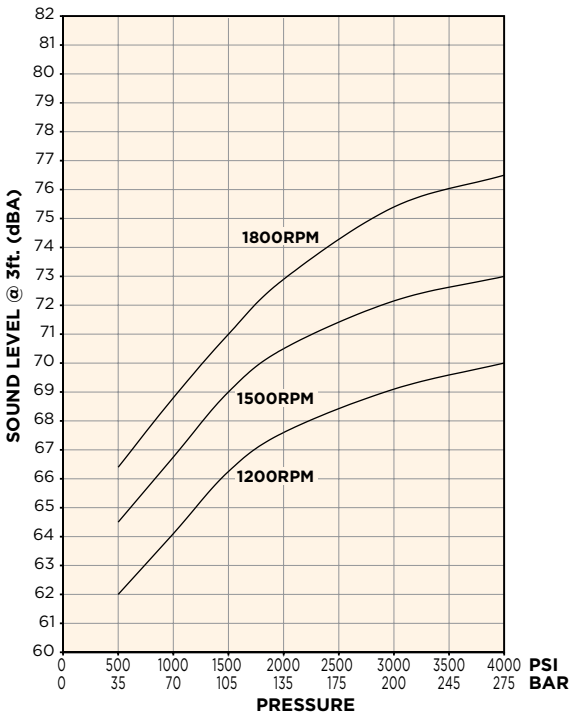

INSTALLATION DRAWING: BASIC PUMP • TOP/BOTTOM PORTED - THRU SHAFT

CONNECTION TABLE	
PORT	**FITTING**
INLET	1.25″ Code 61
OUTLET	1.25″ Code 61
CASE DRAIN (1 LOCATION)	#10 SAE Threaded Port

SHAFT TORQUE RATINGS		
MODEL CODE DESIGNATOR	**SHAFT SIZE**	**ALLOWANCE INPUT TORQUE, IN - LBS**
Y	Keyed, SAE B, 0.875″ DIA	2,250
S	Splined, SAE B, 13T, 16/32 Pitch	2,250
D	Splined, SAE B, 13T, 16/32 Pitch, Industrial Version of "S"	2,250

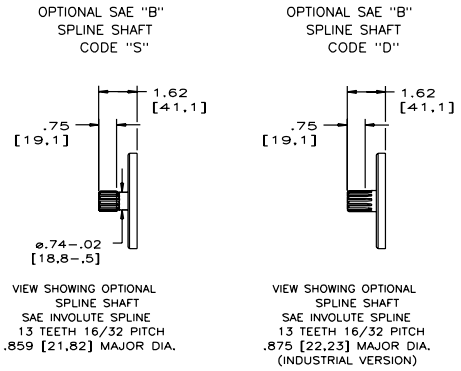

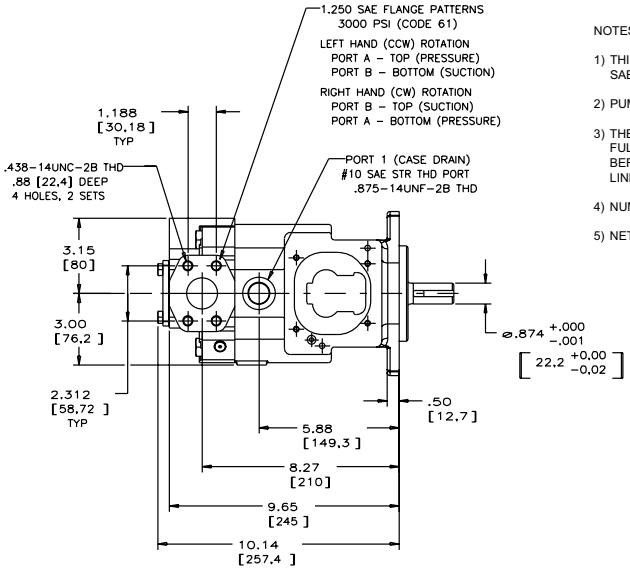

NOTES:

1) THIS DRAWING SHOWS THE "Y" MODEL SHAFT. SAE B KEY, 0.875" DIA.

2) PUMPS ARE DESIGNED FOR ONE-WAY SERVICE.

3) THESE UNITS ARE DESIGNED TO RUN CASE FULL OF FLUID AT ALL TIMES. FILL CASE BEFORE STARTING AND CONNECT DRAIN LINES ACCORDINGLY.

4) NUMERICAL DIMENSIONS GIVEN IN INCHES/[MM].

5) NET WEIGHT - 58 LBS. [26,31 KG].

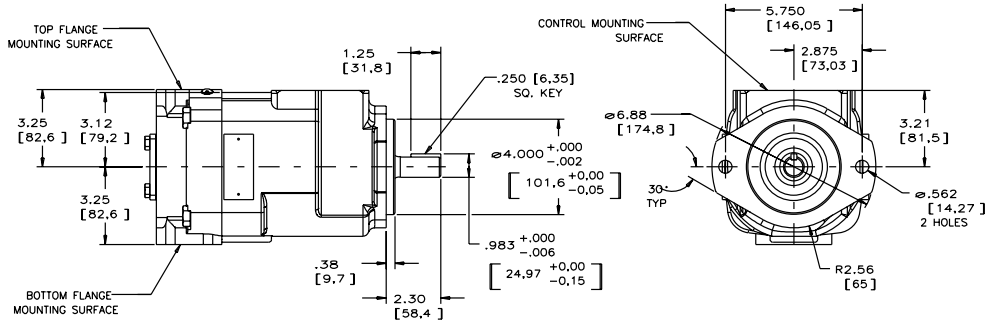

INSTALLATION DRAWING: BASIC PUMP • REAR PORTED

CONNECTION TABLE	
PORT	**FITTING**
INLET	#20 SAE Threaded Port
OUTLET	#16 SAE Threaded Port
CASE DRAIN (1 LOCATION)	#10 SAE Threaded Port

SHAFT TORQUE RATINGS		
MODEL CODE DESIGNATOR	**SHAFT SIZE**	**ALLOWANCE INPUT TORQUE, IN - LBS**
Y	Keyed, SAE B, 0.875" DIA	2,250
S	Splined, SAE B, 13T, 16/32 Pitch	2,250

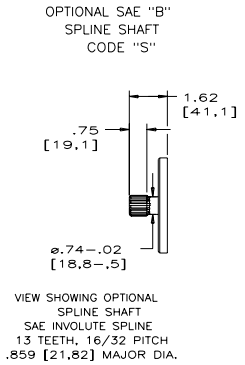

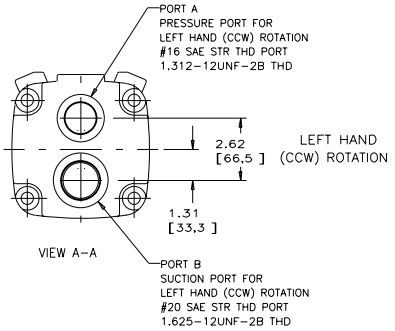

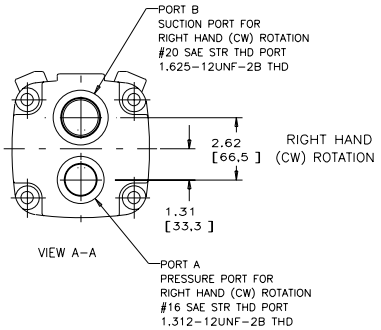

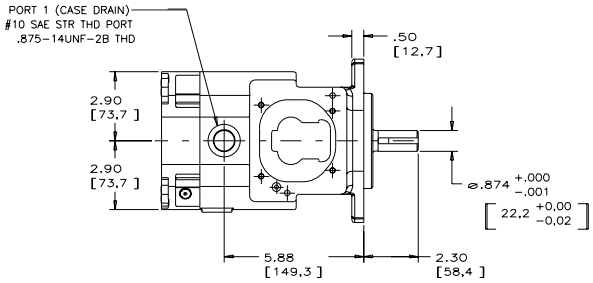

NOTES:

1) THIS DRAWING SHOWS THE "Y" MODEL SHAFT. SAE B KEY, 0.875" DIA.
2) PUMPS ARE DESIGNED FOR ONE-WAY SERVICE.
3) THESE UNITS ARE DESIGNED TO RUN CASE FULL OF FLUID AT ALL TIMES. FILL CASE BEFORE STARTING AND CONNECT DRAIN LINES ACCORDINGLY.
4) NUMERICAL DIMENSIONS GIVEN IN INCHES/[MM].
5) NET WEIGHT - 58 LBS. [26,31 KG].

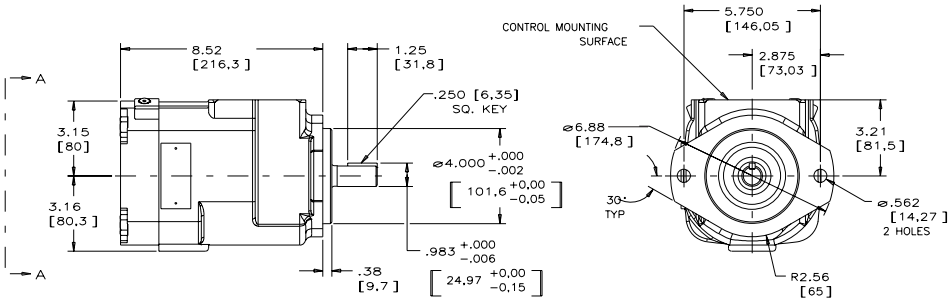

PERFORMANCE DATA

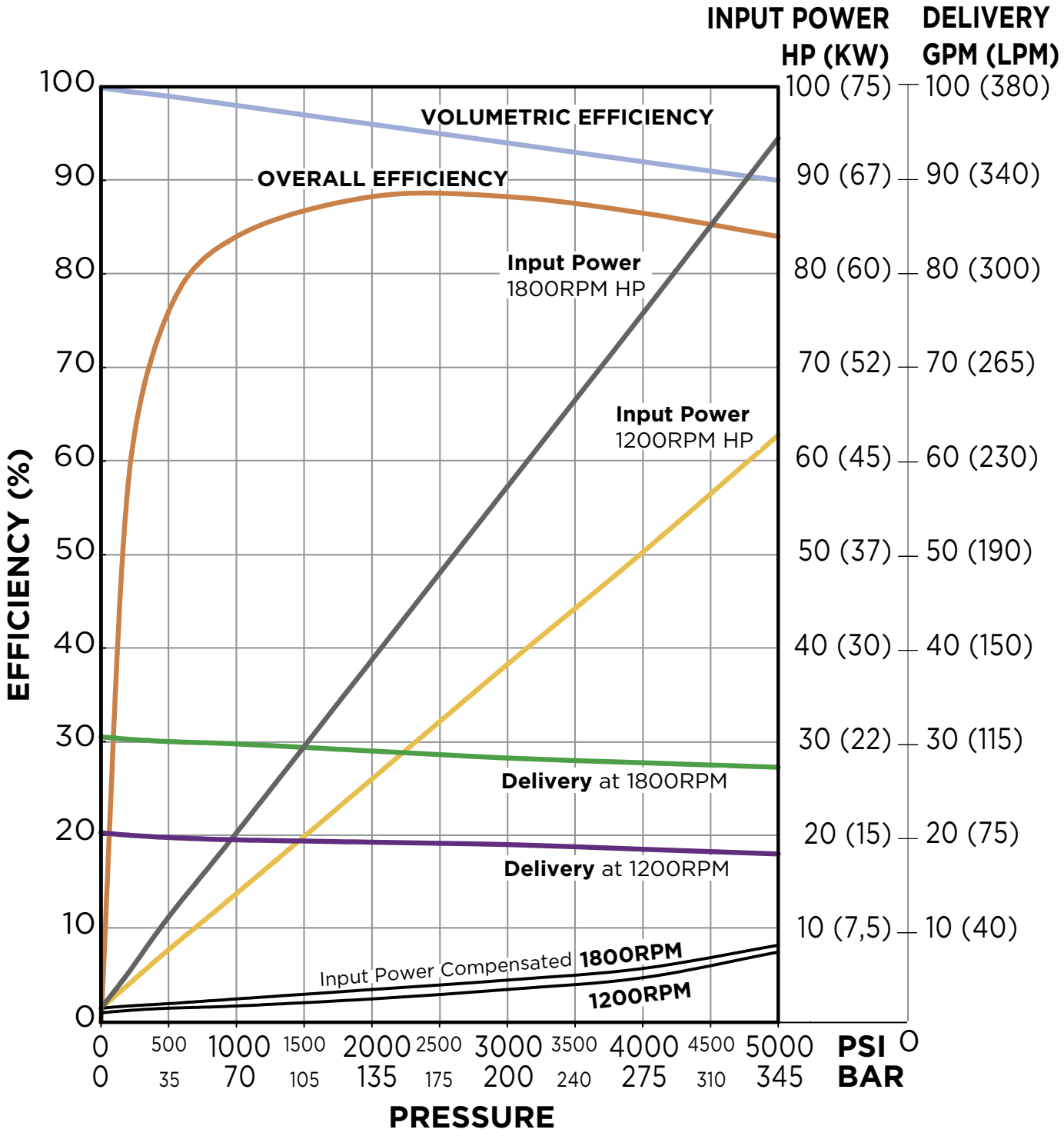

PVWJ-064 | FRAME SIZE: C - DISPLACEMENT: 63.6 CC/REV

DIMENSIONS Inches [mm]

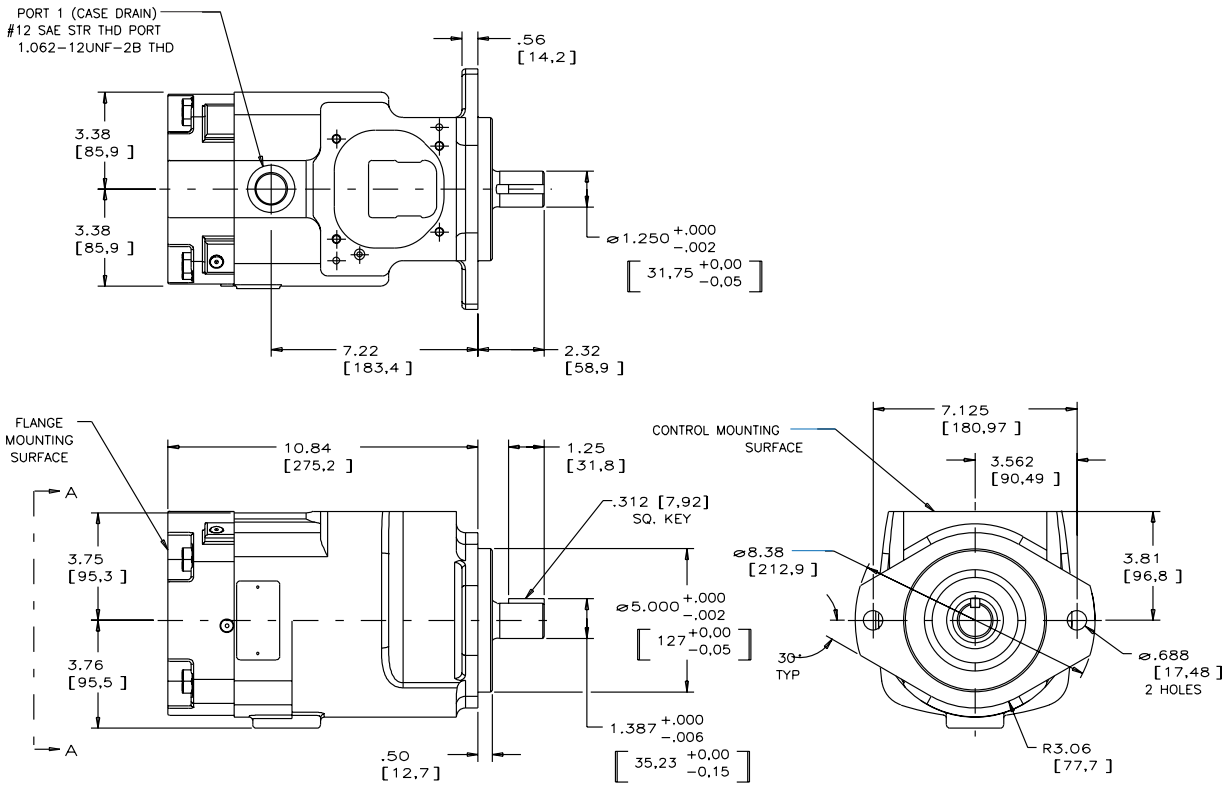

INLET DATA

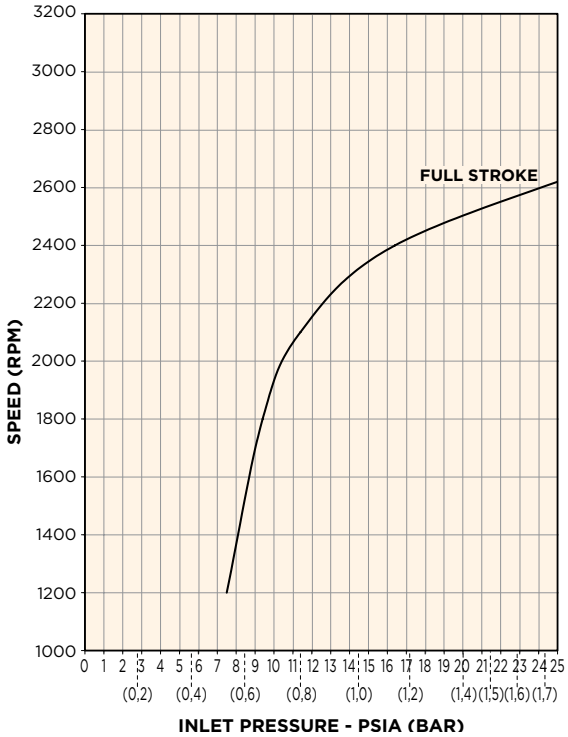

SOUND DATA Full Stroke

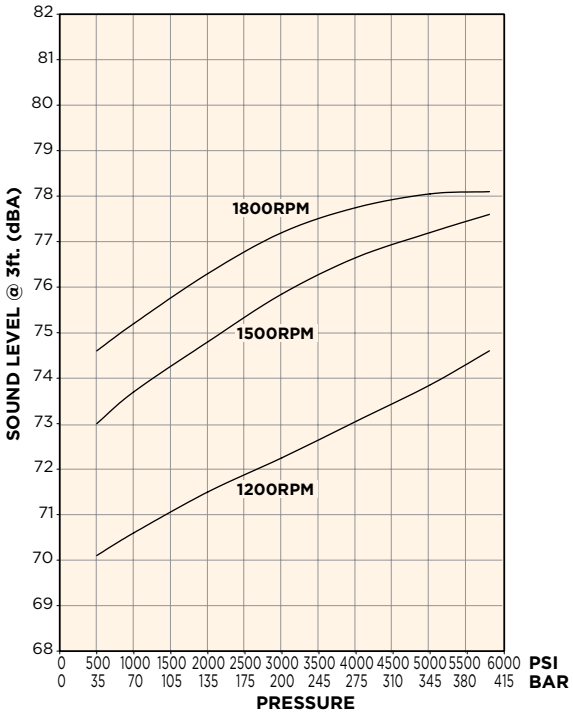

INSTALLATION DRAWING: BASIC PUMP • TOP/BOTTOM PORTED - THRU SHAFT

CONNECTION TABLE	
PORT	**FITTING**
INLET	1.50" Code 62
OUTLET	1.50" Code 62
CASE DRAIN (1 LOCATION)	#12 SAE Threaded Port

SHAFT TORQUE RATINGS		
MODEL CODE DESIGNATOR	**SHAFT SIZE**	**ALLOWANCE INPUT TORQUE, IN - LBS**
Y	Keyed, SAE C, 1.250" DIA	6,400
S	Splined, SAE C, 14T, 12/24 Pitch	6,400
D	Splined, SAE C, 14T, 12/24 Pitch, Industrial Version of "S"	6,400

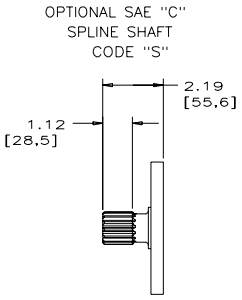

VIEW SHOWING OPTIONAL SPLINE SHAFT
SAE INVOLUTE SPLINE 14 TEETH, 12/24 PITCH
1.235 [31,37] MAJOR DIA.

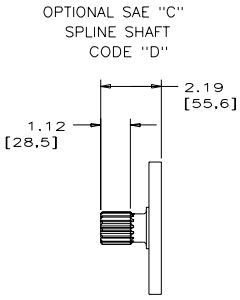

VIEW SHOWING OPTIONAL SPLINE SHAFT
SAE INVOLUTE SPLINE 14 TEETH, 12/24 PITCH
1.250 [31,75] MAJOR DIA.
(INDUSTRIAL VERSION)

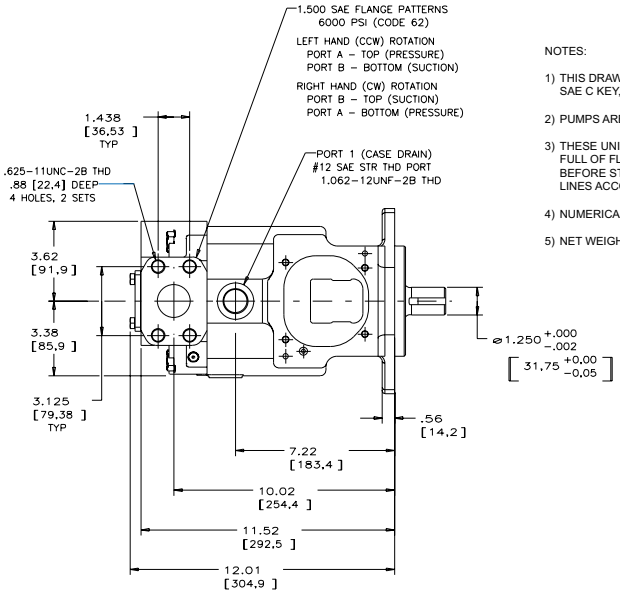

NOTES:

1) THIS DRAWING SHOWS THE "Y" MODEL SHAFT. SAE C KEY, 1.250" DIA.

2) PUMPS ARE DESIGNED FOR ONE-WAY SERVICE.

3) THESE UNITS ARE DESIGNED TO RUN CASE FULL OF FLUID AT ALL TIMES. FILL CASE BEFORE STARTING AND CONNECT DRAIN LINES ACCORDINGLY.

4) NUMERICAL DIMENSIONS GIVEN IN INCHES/[MM].

5) NET WEIGHT - 83 LBS. [37,65 KG].

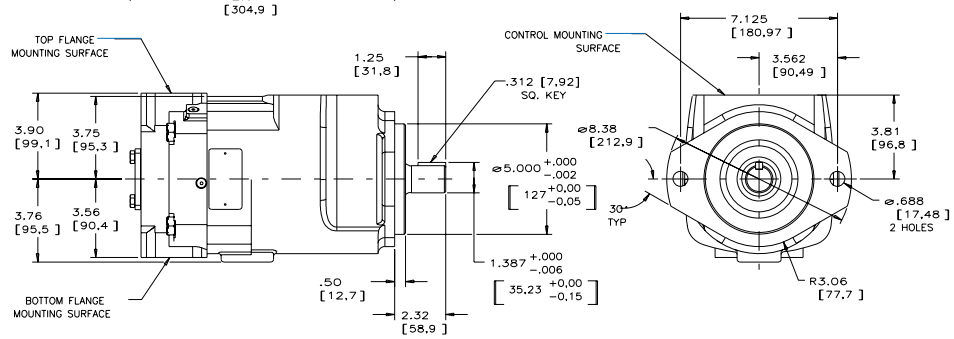

INSTALLATION DRAWING: BASIC PUMP • REAR PORTED

CONNECTION TABLE	
PORT	**FITTING**
INLET	1.50″ Code 61
OUTLET	1.25″ Code 62
CASE DRAIN (1 LOCATION)	#12 SAE Threaded Port

SHAFT TORQUE RATINGS		
MODEL CODE DESIGNATOR	**SHAFT SIZE**	**ALLOWANCE INPUT TORQUE, IN - LBS**
Y	Keyed, SAE C, 1.250″ DIA	6,400
S	Splined, SAE C, 14T, 12/24 Pitch	6,400

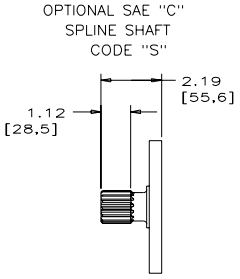

VIEW SHOWING OPTIONAL SPLINE SHAFT
SAE INVOLUTE SPLINE 14 TEETH, 12/24 PITCH
1.235 [31,37] MAJOR DIA.

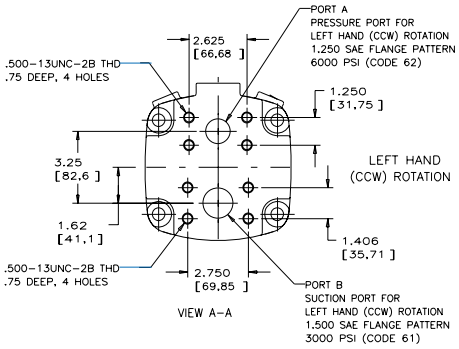

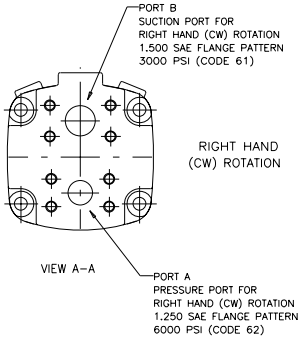

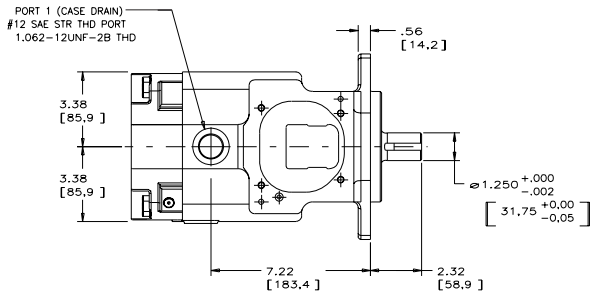

NOTES:

1) THIS DRAWING SHOWS THE "Y" MODEL SHAFT. SAE C KEY, 1.250" DIA.
2) PUMPS ARE DESIGNED FOR ONE-WAY SERVICE.
3) THESE UNITS ARE DESIGNED TO RUN CASE FULL OF FLUID AT ALL TIMES. FILL CASE BEFORE STARTING AND CONNECT DRAIN LINES ACCORDINGLY.
4) NUMERICAL DIMENSIONS GIVEN IN INCHES/[MM].
5) NET WEIGHT - 83 LBS. [37,65 KG].

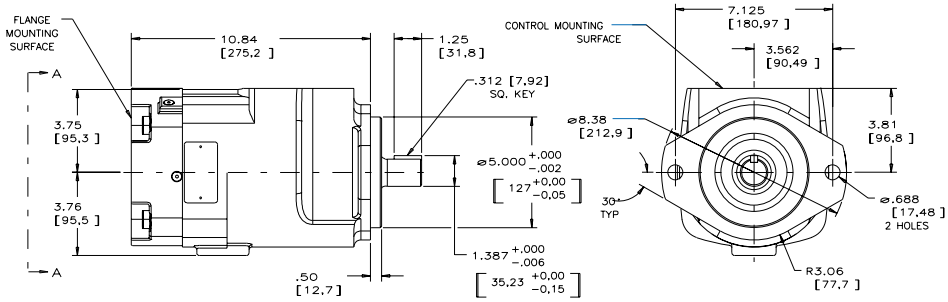

PERFORMANCE DATA

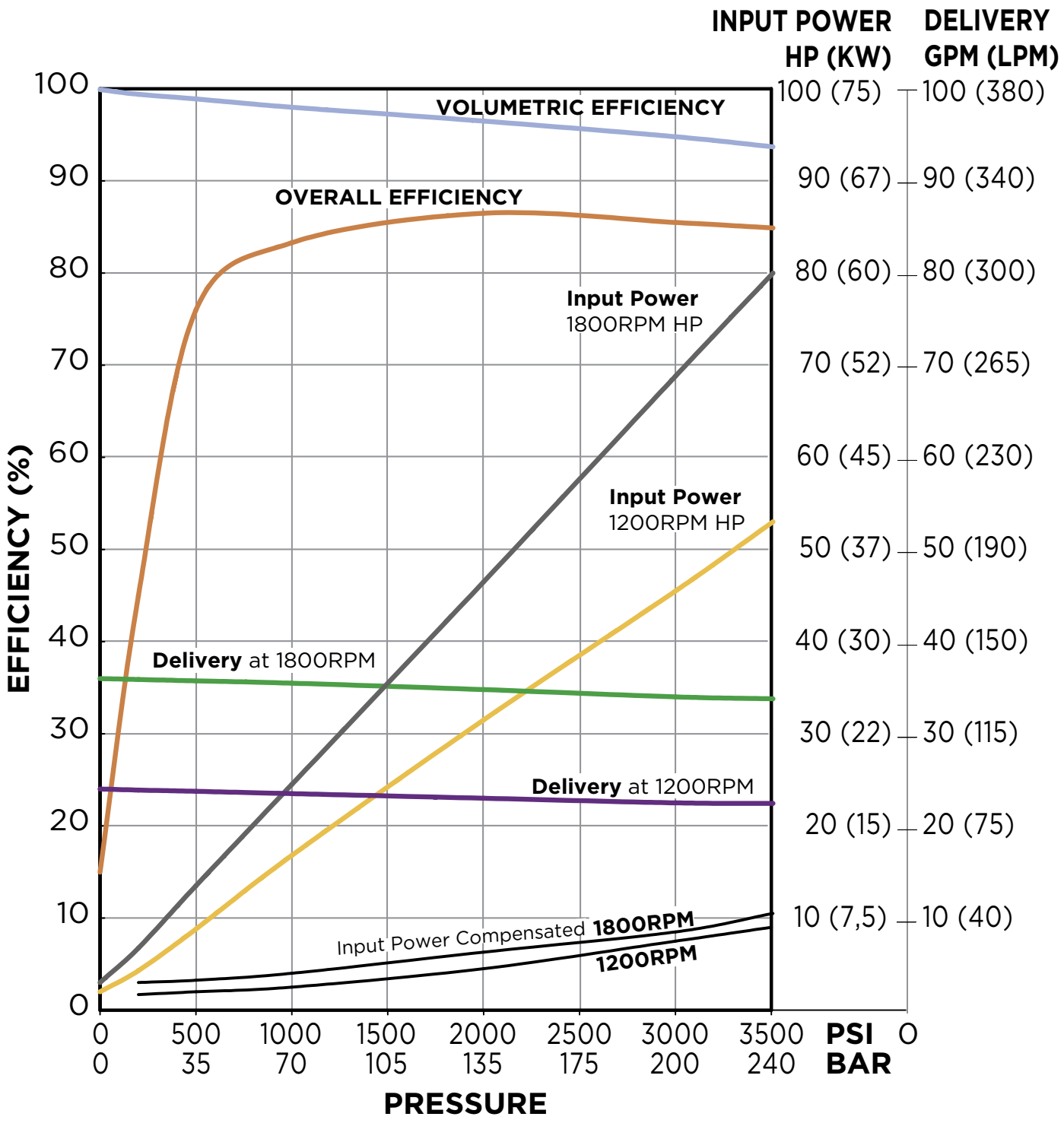

PVWJ-076 | FRAME SIZE: C - DISPLACEMENT: 76.5 CC/REV

DIMENSIONS Inches [mm]

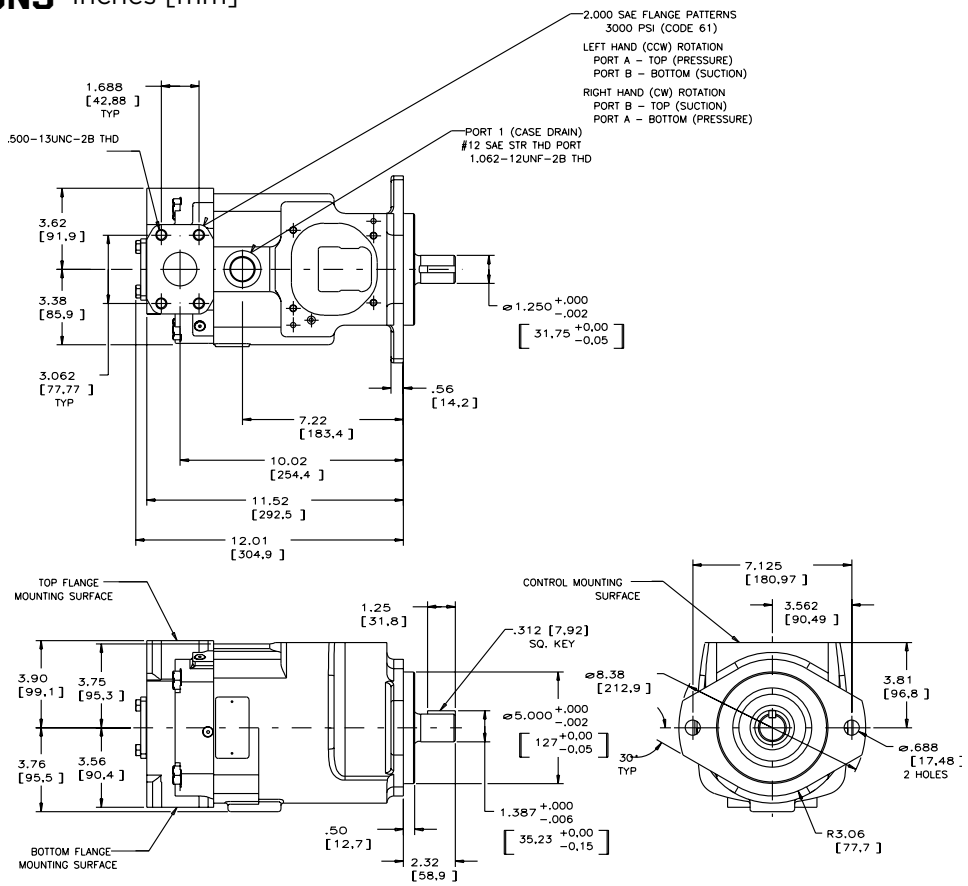

INLET DATA

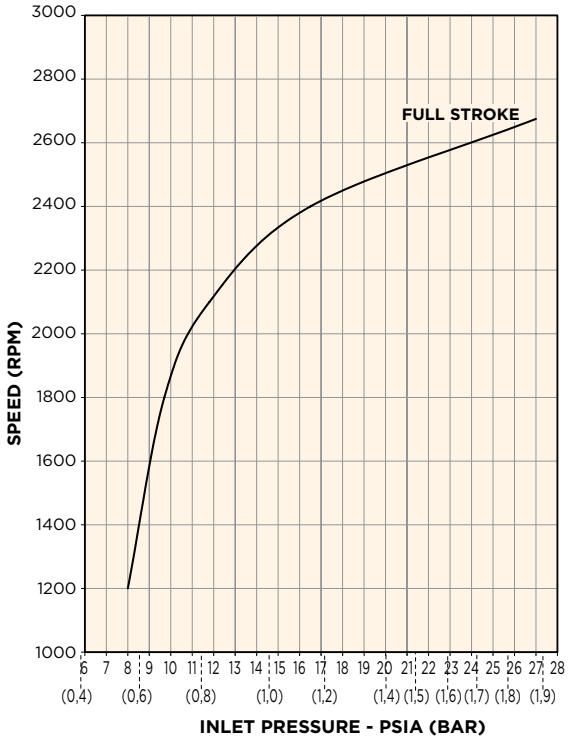

SOUND DATA Full Stroke

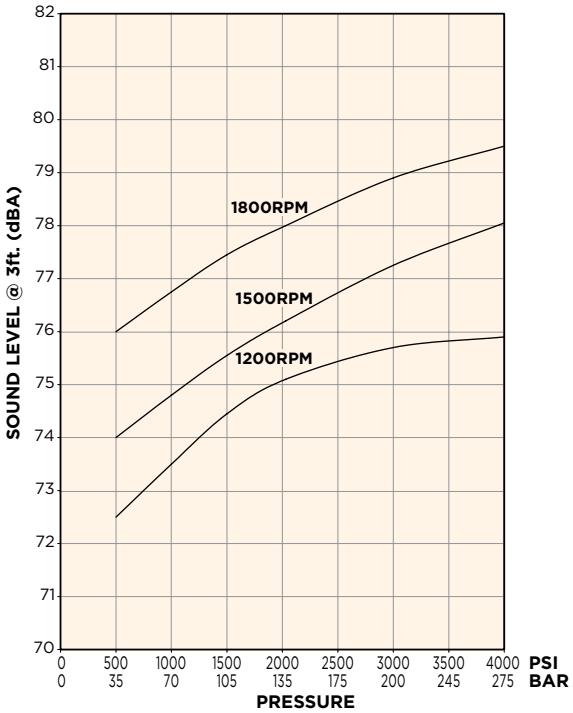

INSTALLATION DRAWING: BASIC PUMP • TOP/BOTTOM PORTED - THRU SHAFT

CONNECTION TABLE	
PORT	**FITTING**
INLET	2.00″ Code 61
OUTLET	2.00″ Code 61
CASE DRAIN (1 LOCATION)	#12 SAE Threaded Port

SHAFT TORQUE RATINGS		
MODEL CODE DESIGNATOR	**SHAFT SIZE**	**ALLOWANCE INPUT TORQUE, IN - LBS**
Y	Keyed, SAE C, 1.250″ DIA	6,400
S	Splined, SAE C, 14T, 12/24 Pitch	6,400
D	Splined, SAE C, 14T, 12/24 Pitch, Industrial Version of "S"	6,400

SAE "C" SPLINE SHAFT CODE "S"

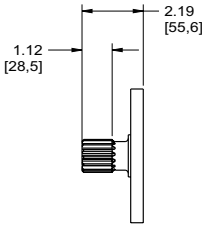

SPLINE SHAFT
SAE INVOLUTE SPLINE
14 TEETH, 12/24 PITCH
Ø1.235 [31,37] MAJOR DIA.

SAE "C" SPLINE SHAFT CODE "D"

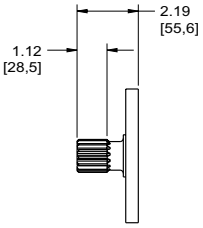

SPLINE SHAFT
SAE INVOLUTE SPLINE
14 TEETH, 12/24 PITCH
Ø1.250 [31,75] MAJOR DIA.
(INDUSTRIAL VERSION)

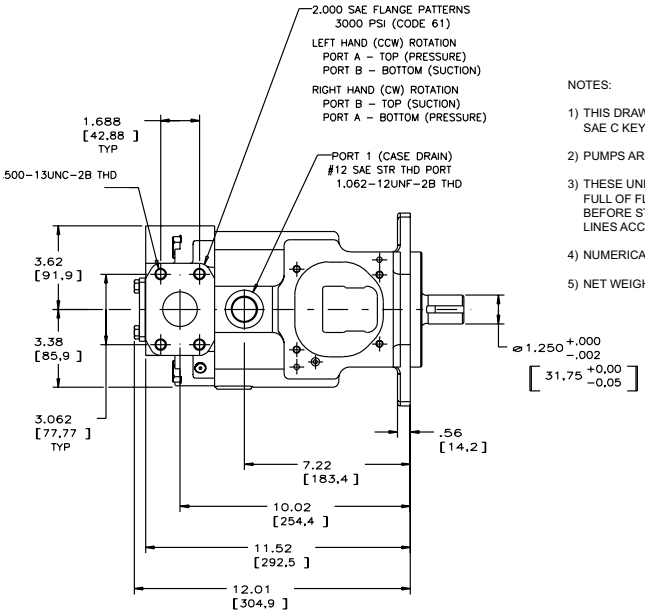

NOTES:

1) THIS DRAWING SHOWS THE "Y" MODEL SHAFT. SAE C KEY, 1.250" DIA.
2) PUMPS ARE DESIGNED FOR ONE-WAY SERVICE.
3) THESE UNITS ARE DESIGNED TO RUN CASE FULL OF FLUID AT ALL TIMES. FILL CASE BEFORE STARTING AND CONNECT DRAIN LINES ACCORDINGLY.
4) NUMERICAL DIMENSIONS GIVEN IN INCHES/[MM].
5) NET WEIGHT - 83 LBS. [37,65 KG].

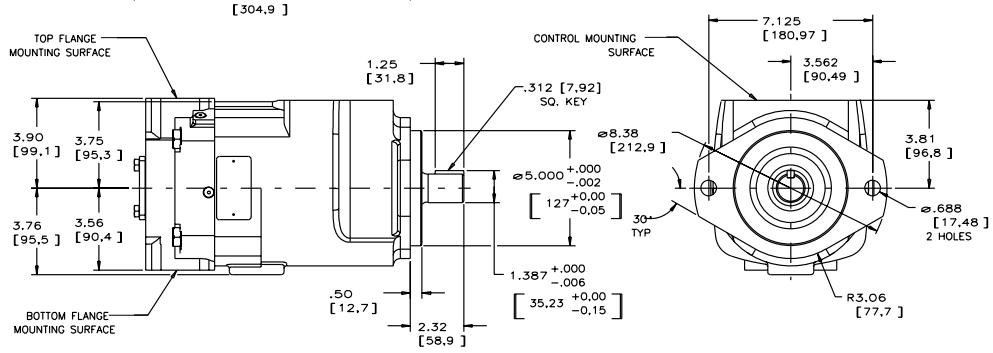

INSTALLATION DRAWING: BASIC PUMP • REAR PORTED

CONNECTION TABLE	
PORT	**FITTING**
INLET	2.00″ Code 61
OUTLET	#20 SAE
CASE DRAIN (1 LOCATION)	#12 SAE Threaded Port

SHAFT TORQUE RATINGS		
MODEL CODE DESIGNATOR	**SHAFT SIZE**	**ALLOWANCE INPUT TORQUE, IN - LBS**
Y	Keyed, SAE C, 1.250″ DIA	6,400
S	Splined, SAE C, 14T, 12/24 Pitch	6,400

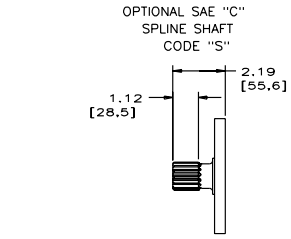

VIEW SHOWING OPTIONAL SPLINE SHAFT
SAE INVOLUTE SPLINE 14 TEETH, 12/24 PITCH
1.235 [31.37] MAJOR DIA.

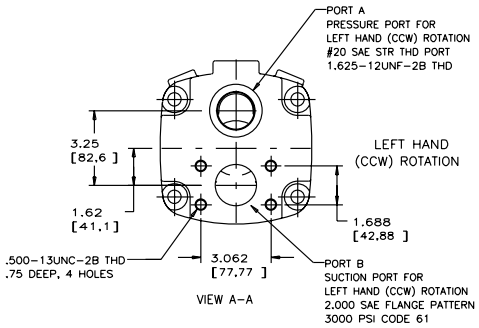

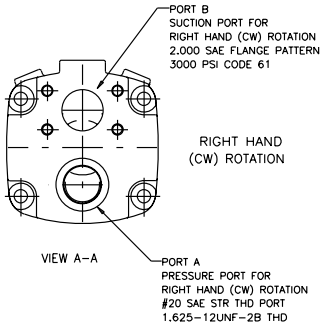

NOTES:

1) THIS DRAWING SHOWS THE "Y" MODEL SHAFT. SAE C KEY, 1.250" DIA.
2) PUMPS ARE DESIGNED FOR ONE-WAY SERVICE.
3) THESE UNITS ARE DESIGNED TO RUN CASE FULL OF FLUID AT ALL TIMES. FILL CASE BEFORE STARTING AND CONNECT DRAIN LINES ACCORDINGLY.
4) NUMERICAL DIMENSIONS GIVEN IN INCHES/[MM].
5) NET WEIGHT - 83 LBS. [37,65 KG].

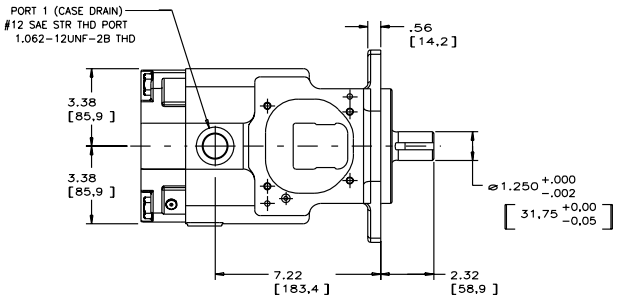

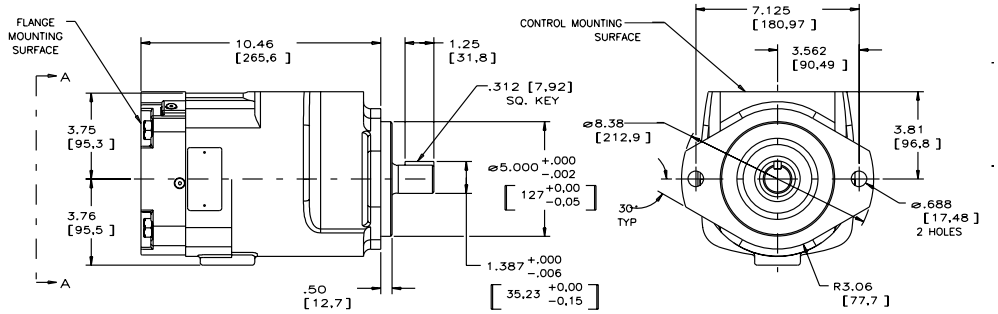

PERFORMANCE DATA

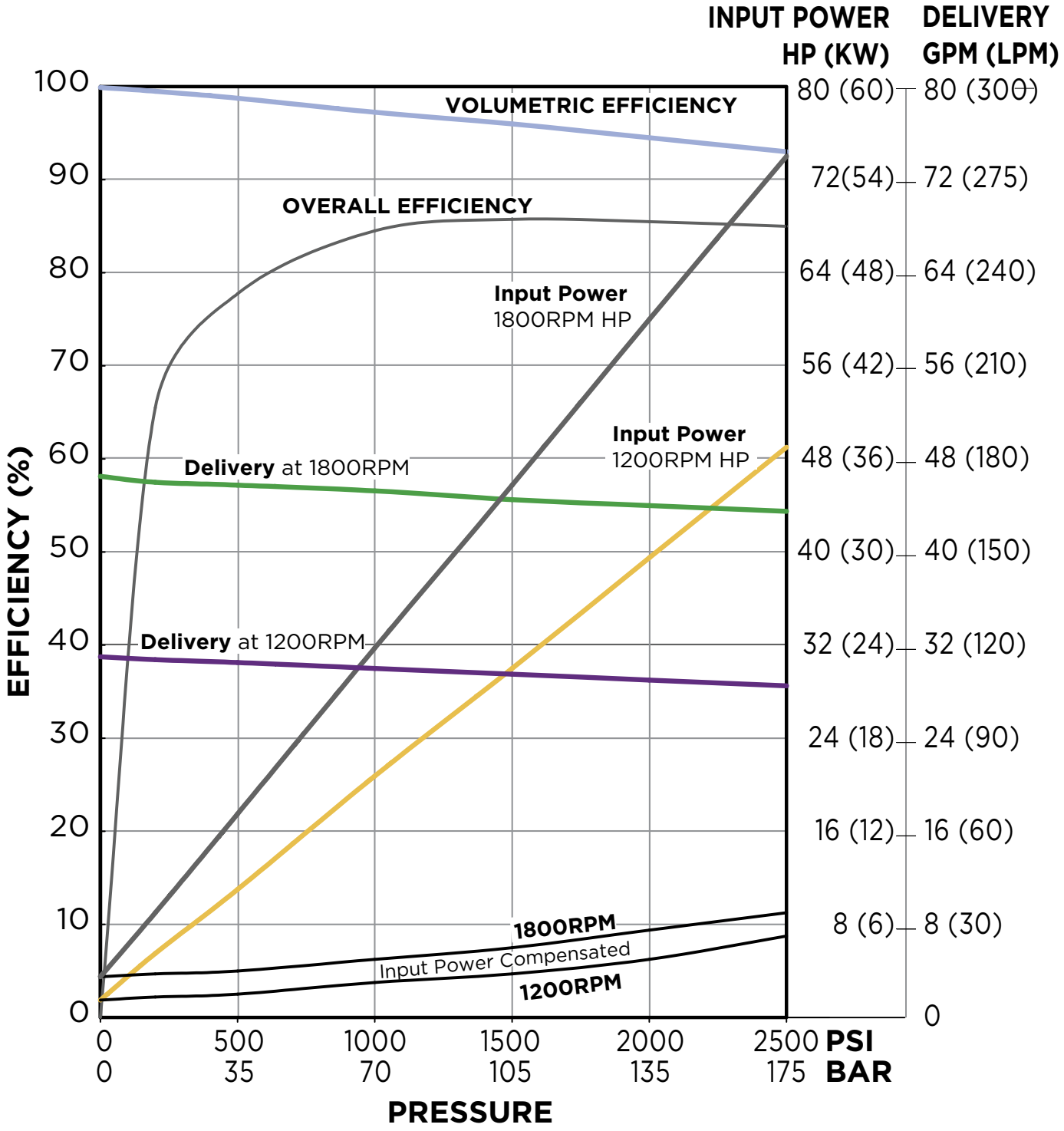

PVWJ-098 | FRAME SIZE: C - DISPLACEMENT: 98.3 CC/REV

DIMENSIONS Inches [mm]

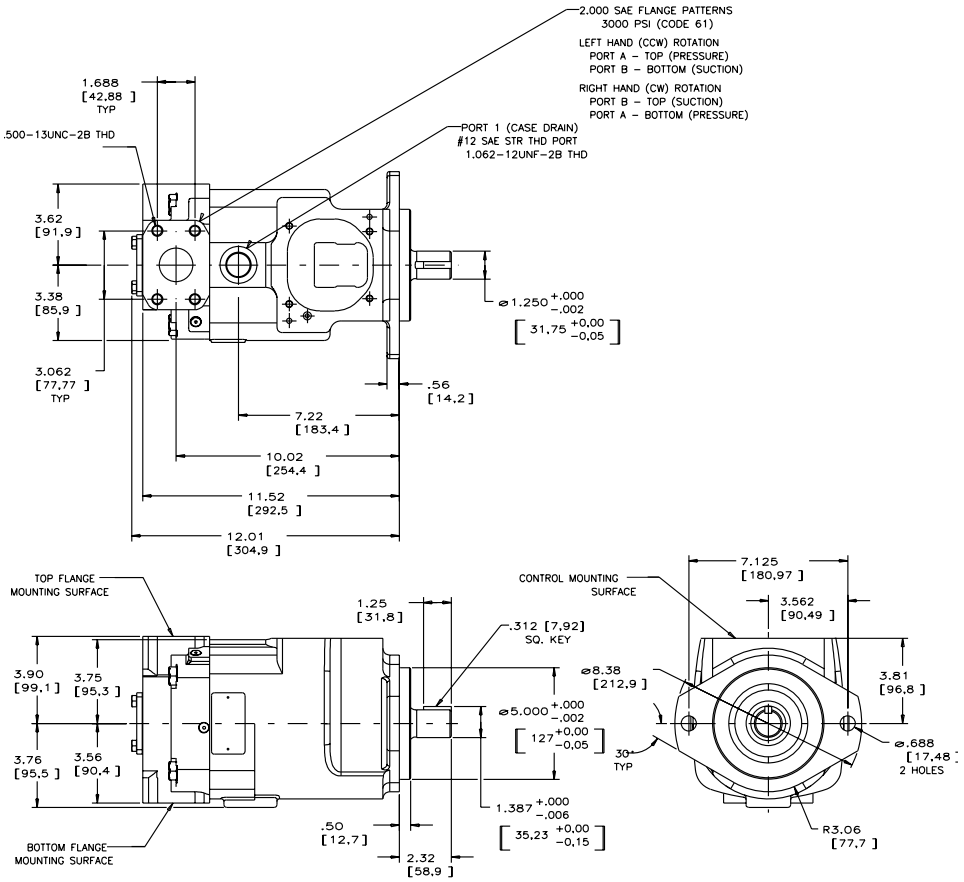

INLET DATA

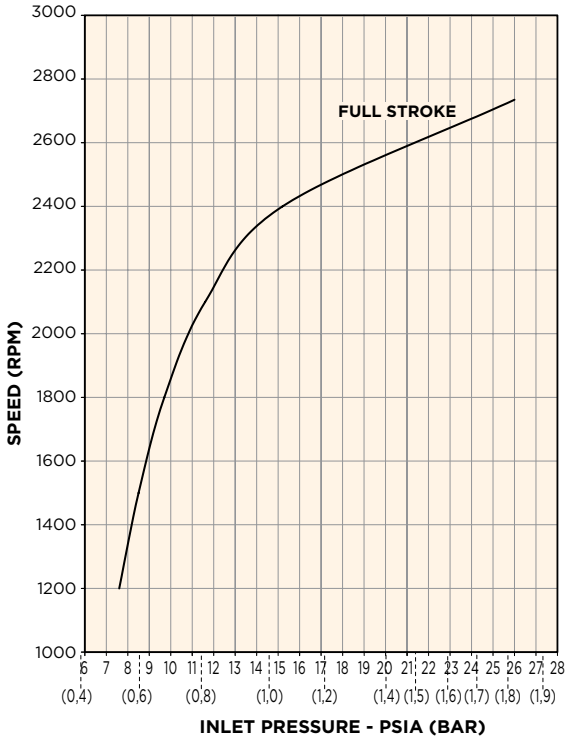

SOUND DATA Full Stroke

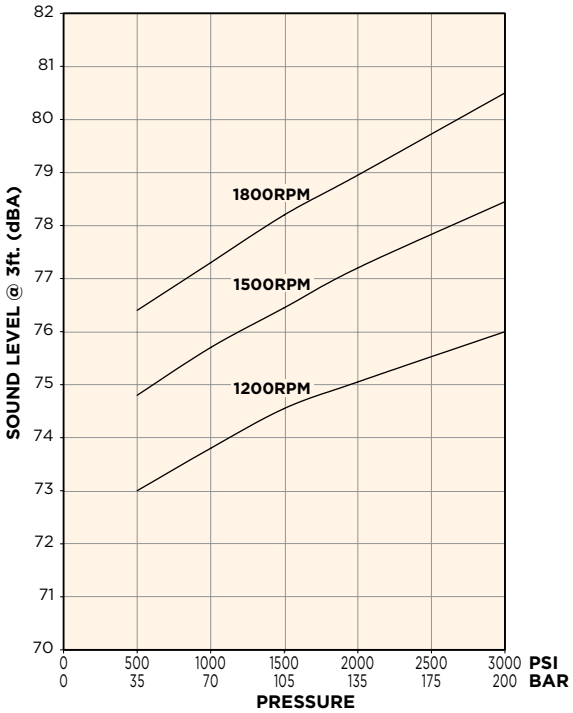

INSTALLATION DRAWING: BASIC PUMP • TOP/BOTTOM PORTED - THRU SHAFT

CONNECTION TABLE	
PORT	**FITTING**
INLET	2.00″ Code 61
OUTLET	2.00″ Code 61
CASE DRAIN (1 LOCATION)	#12 SAE Threaded Port

SHAFT TORQUE RATINGS		
MODEL CODE DESIGNATOR	**SHAFT SIZE**	**ALLOWANCE INPUT TORQUE, IN - LBS**
Y	Keyed, SAE C, 1.250″ DIA	6,400
S	Splined, SAE C, 14T, 12/24 Pitch	6,400
D	Splined, SAE C, 14T, 12/24 Pitch, Industrial Version of "S"	6,400

SAE "C" SPLINE SHAFT CODE "S"

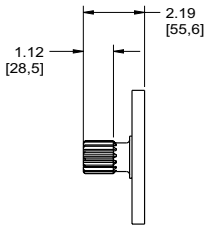

SPLINE SHAFT
SAE INVOLUTE SPLINE
14 TEETH, 12/24 PITCH
Ø1.235 [31,37] MAJOR DIA.

SAE "C" SPLINE SHAFT CODE "D"

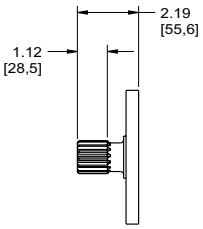

SPLINE SHAFT
SAE INVOLUTE SPLINE
14 TEETH, 12/24 PITCH
Ø1.250 [31,75] MAJOR DIA.
(INDUSTRIAL VERSION)

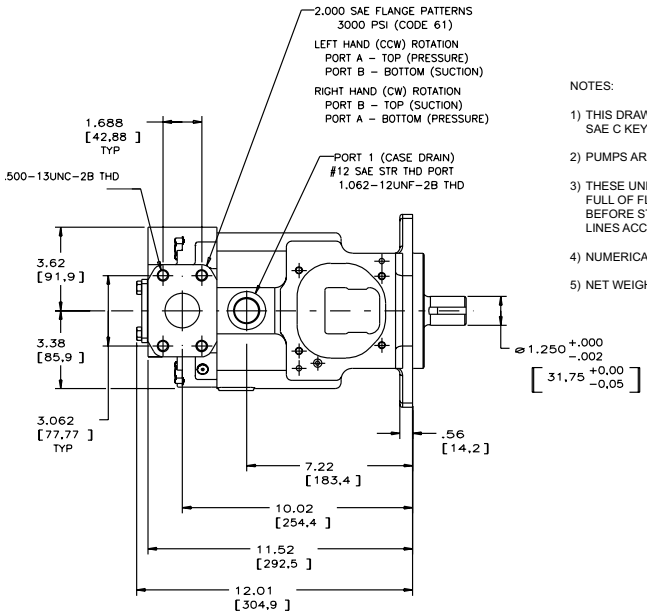

NOTES:

1) THIS DRAWING SHOWS THE "Y" MODEL SHAFT. SAE C KEY, 1.250" DIA.
2) PUMPS ARE DESIGNED FOR ONE-WAY SERVICE.
3) THESE UNITS ARE DESIGNED TO RUN CASE FULL OF FLUID AT ALL TIMES. FILL CASE BEFORE STARTING AND CONNECT DRAIN LINES ACCORDINGLY.
4) NUMERICAL DIMENSIONS GIVEN IN INCHES/[MM].
5) NET WEIGHT - 83 LBS. [37,65 KG].

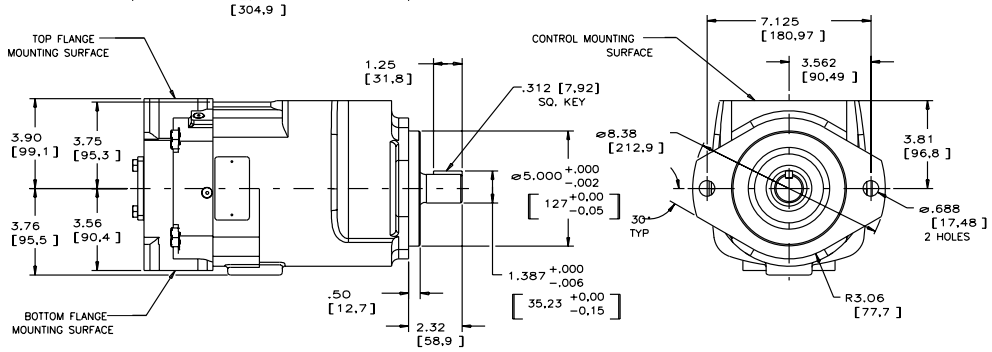

INSTALLATION DRAWING: BASIC PUMP • REAR PORTED

CONNECTION TABLE	
PORT	**FITTING**
INLET	2.00" Code 61
OUTLET	#20 SAE
CASE DRAIN (1 LOCATION)	#12 SAE Threaded Port

SHAFT TORQUE RATINGS		
MODEL CODE DESIGNATOR	**SHAFT SIZE**	**ALLOWANCE INPUT TORQUE, IN - LBS**
Y	Keyed, SAE C, 1.250" DIA	6,400
S	Splined, SAE C, 14T, 12/24 Pitch	6,400

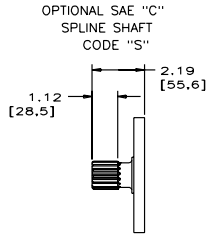

VIEW SHOWING OPTIONAL SPLINE SHAFT
SAE INVOLUTE SPLINE 14 TEETH, 12/24 PITCH
1.235 [31.37] MAJOR DIA.

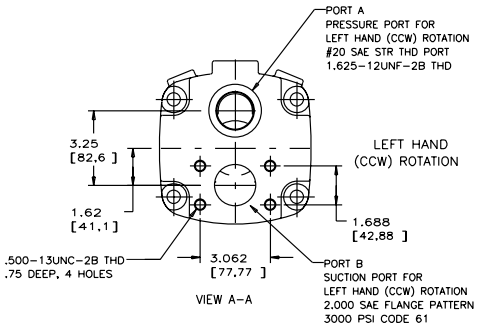

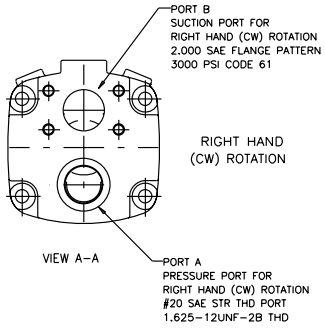

NOTES:

1) THIS DRAWING SHOWS THE "Y" MODEL SHAFT. SAE C KEY, 1.250" DIA.

2) PUMPS ARE DESIGNED FOR ONE-WAY SERVICE.

3) THESE UNITS ARE DESIGNED TO RUN CASE FULL OF FLUID AT ALL TIMES. FILL CASE BEFORE STARTING AND CONNECT DRAIN LINES ACCORDINGLY.

4) NUMERICAL DIMENSIONS GIVEN IN INCHES/[MM].

5) NET WEIGHT - 83 LBS. [37,65 KG].

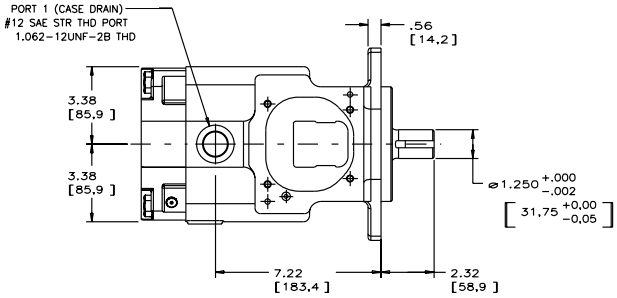

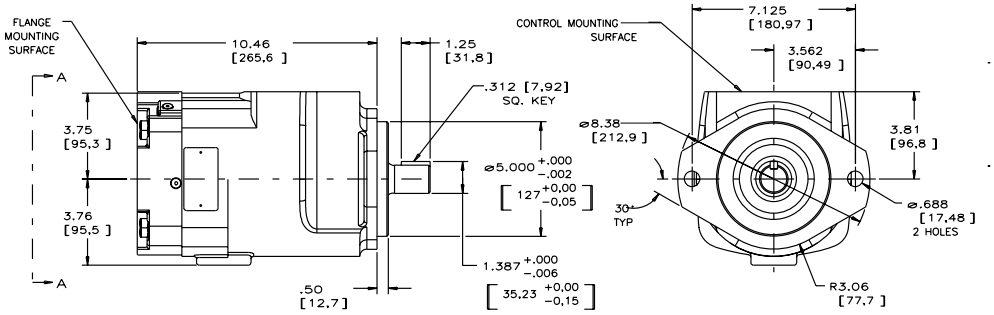

PERFORMANCE DATA

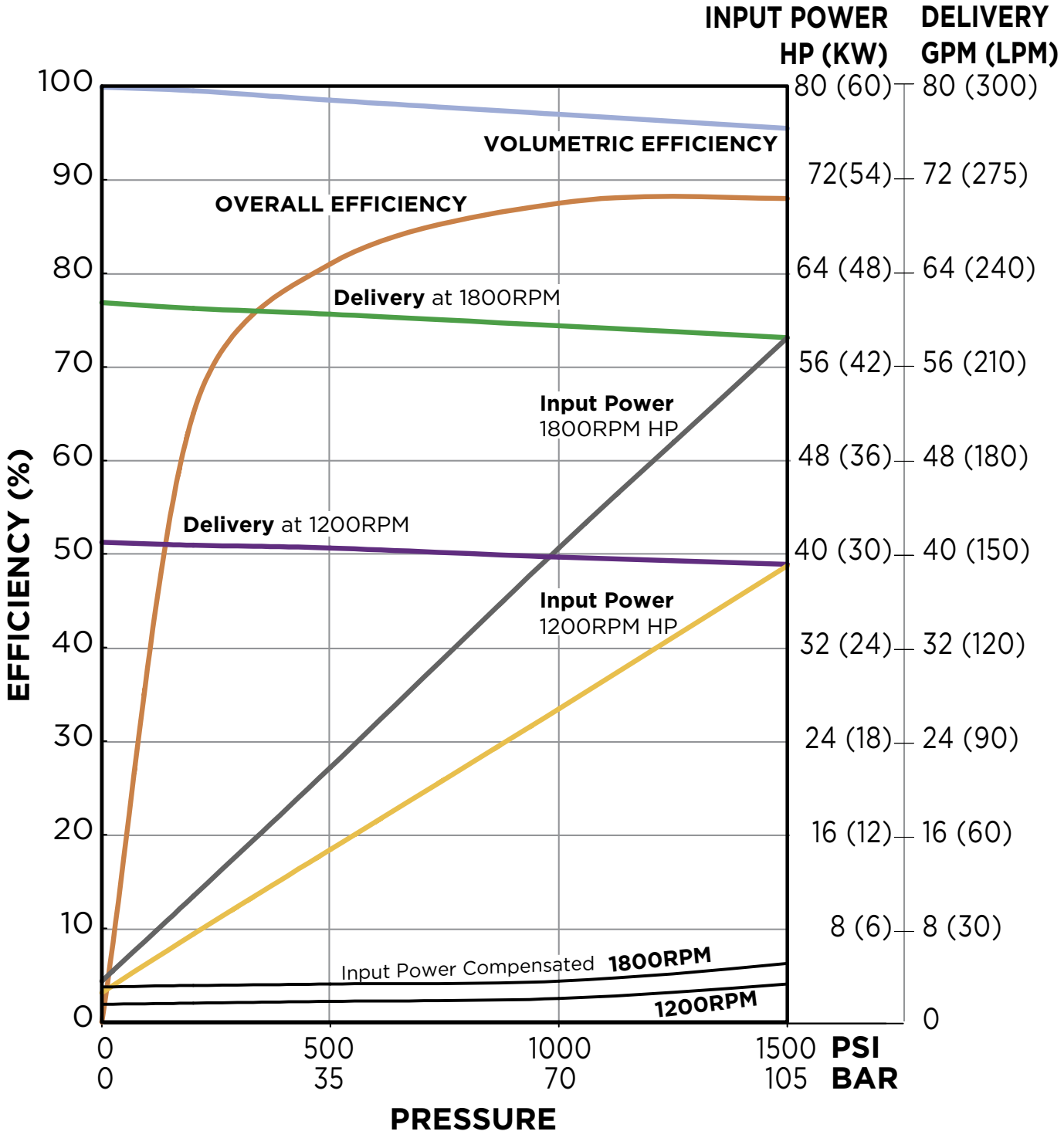

PVWJ-130 | FRAME SIZE: C - DISPLACEMENT: 130.2 CC/REV

DIMENSIONS Inches [mm]

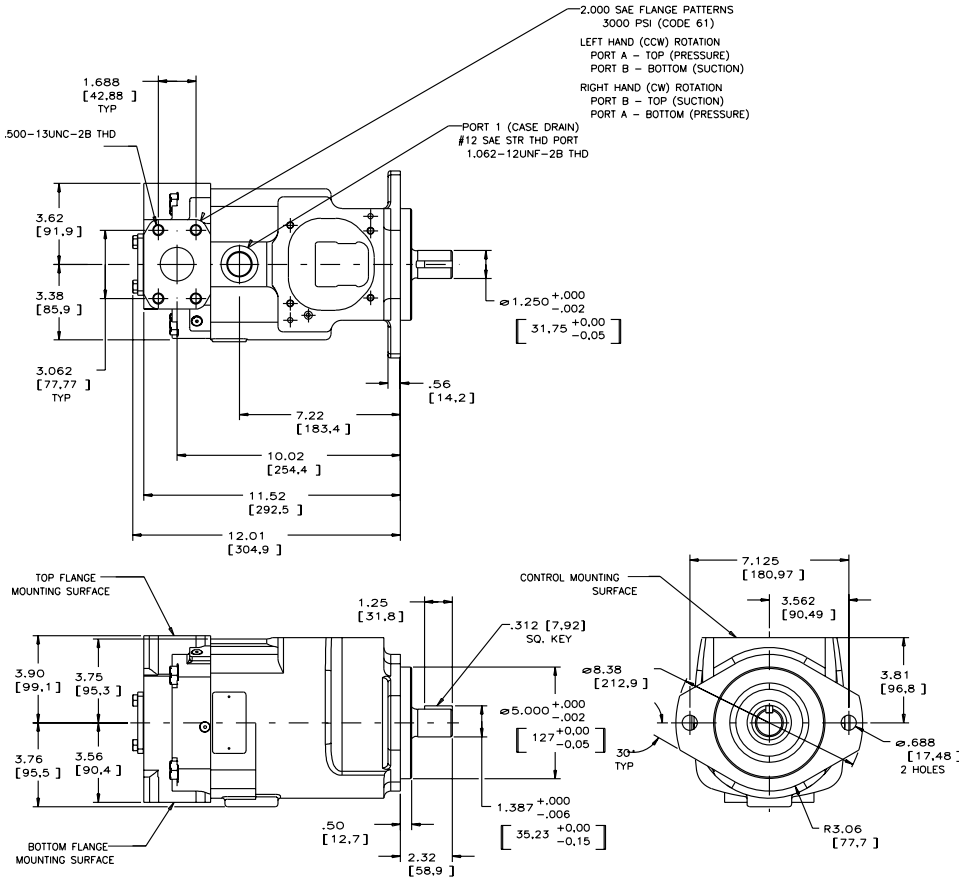

INLET DATA

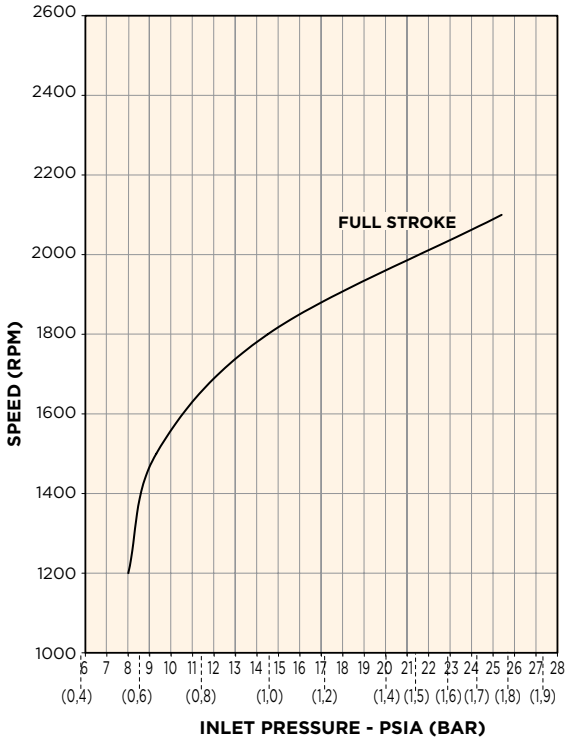

SOUND DATA Full Stroke

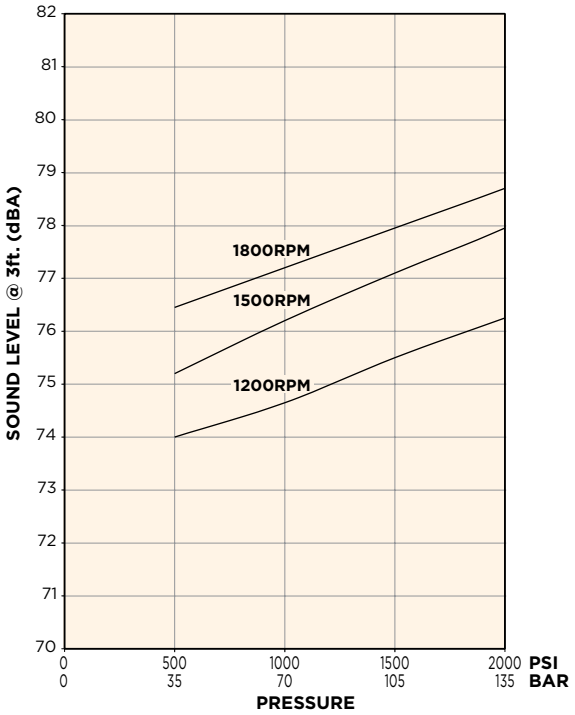

INSTALLATION DRAWING: BASIC PUMP • TOP/BOTTOM PORTED - THRU SHAFT

CONNECTION TABLE	
PORT	**FITTING**
INLET	2.00″ Code 61
OUTLET	2.00″ Code 61
CASE DRAIN (1 LOCATION)	#12 SAE Threaded Port

SHAFT TORQUE RATINGS		
MODEL CODE DESIGNATOR	**SHAFT SIZE**	**ALLOWANCE INPUT TORQUE, IN - LBS**
Y	Keyed, SAE C, 1.250″ DIA	6,400
S	Splined, SAE C, 14T, 12/24 Pitch	6,400
D	Splined, SAE C, 14T, 12/24 Pitch, Industrial Version of "S"	6,400

SAE "C" SPLINE SHAFT CODE "S"

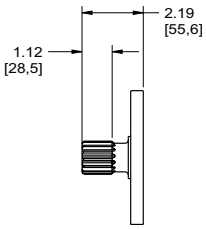

SPLINE SHAFT
SAE INVOLUTE SPLINE
14 TEETH, 12/24 PITCH
Ø1.235 [31,37] MAJOR DIA.

SAE "C" SPLINE SHAFT CODE "D"

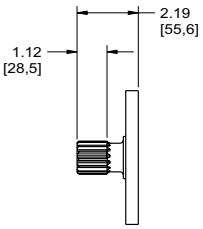

SPLINE SHAFT
SAE INVOLUTE SPLINE
14 TEETH, 12/24 PITCH
Ø1.250 [31,75] MAJOR DIA.
(INDUSTRIAL VERSION)

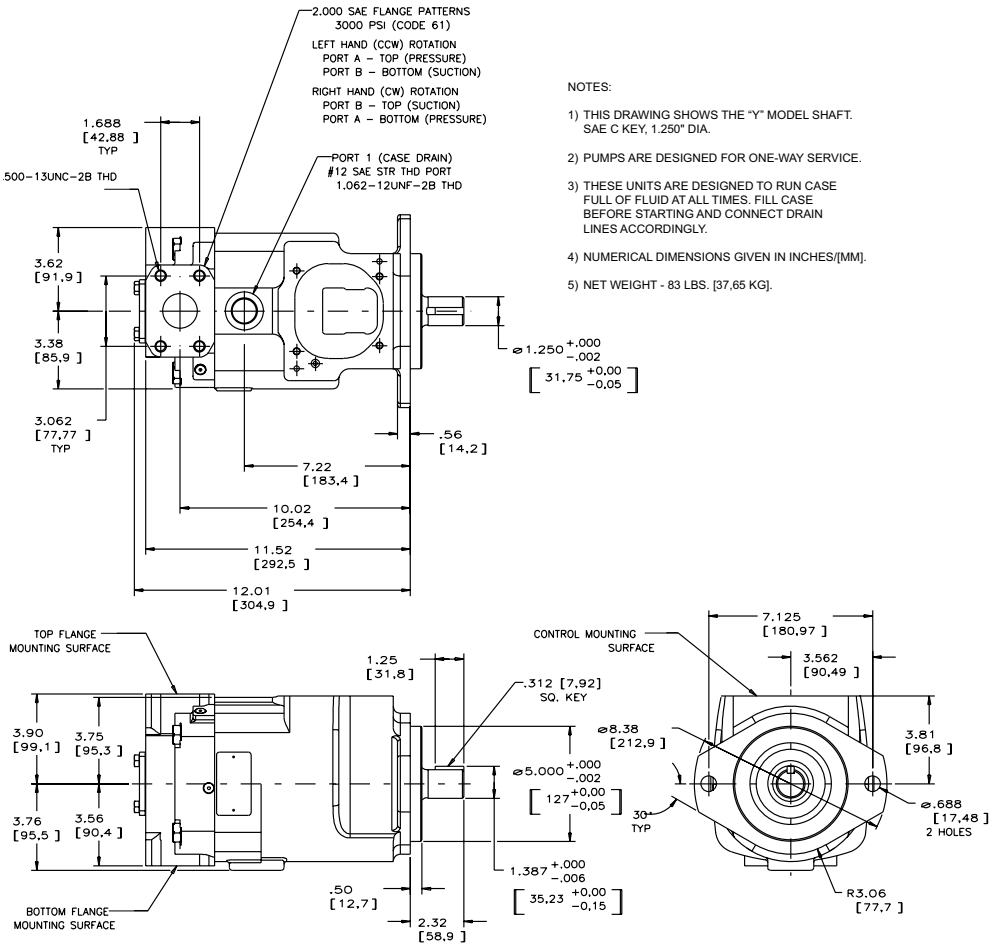

NOTES:

1) THIS DRAWING SHOWS THE "Y" MODEL SHAFT. SAE C KEY, 1.250" DIA.
2) PUMPS ARE DESIGNED FOR ONE-WAY SERVICE.
3) THESE UNITS ARE DESIGNED TO RUN CASE FULL OF FLUID AT ALL TIMES. FILL CASE BEFORE STARTING AND CONNECT DRAIN LINES ACCORDINGLY.
4) NUMERICAL DIMENSIONS GIVEN IN INCHES/[MM].
5) NET WEIGHT - 83 LBS. [37,65 KG].

INSTALLATION DRAWING: BASIC PUMP • REAR PORTED

CONNECTION TABLE	
PORT	**FITTING**
INLET	2.00″ Code 61
OUTLET	#20 SAE
CASE DRAIN (1 LOCATION)	#12 SAE Threaded Port

SHAFT TORQUE RATINGS		
MODEL CODE DESIGNATOR	**SHAFT SIZE**	**ALLOWANCE INPUT TORQUE, IN - LBS**
Y	Keyed, SAE C, 1.250″ DIA	6,400
S	Splined, SAE C, 14T, 12/24 Pitch	6,400

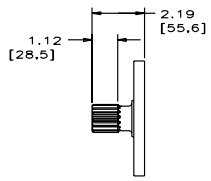

VIEW SHOWING OPTIONAL SPLINE SHAFT
SAE INVOLUTE SPLINE 14 TEETH, 12/24 PITCH
1.235 [31.37] MAJOR DIA.

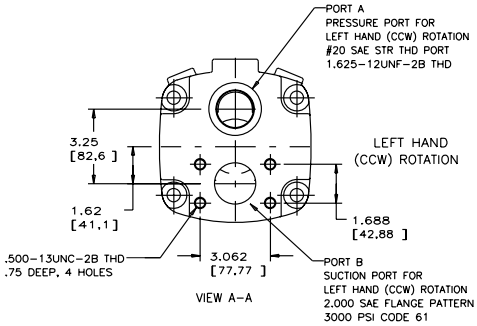

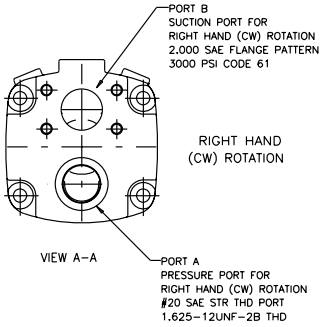

NOTES:

1) THIS DRAWING SHOWS THE "Y" MODEL SHAFT. SAE C KEY, 1.250" DIA.

2) PUMPS ARE DESIGNED FOR ONE-WAY SERVICE.

3) THESE UNITS ARE DESIGNED TO RUN CASE FULL OF FLUID AT ALL TIMES. FILL CASE BEFORE STARTING AND CONNECT DRAIN LINES ACCORDINGLY.

4) NUMERICAL DIMENSIONS GIVEN IN INCHES/[MM].

5) NET WEIGHT - 83 LBS. [37,65 KG].

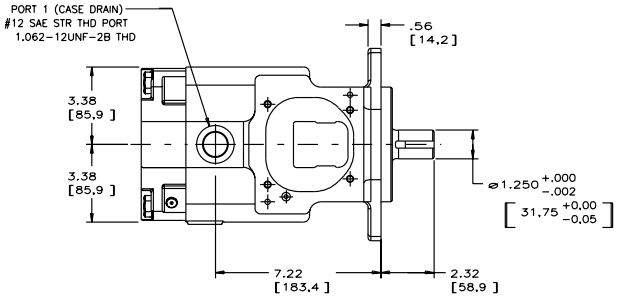

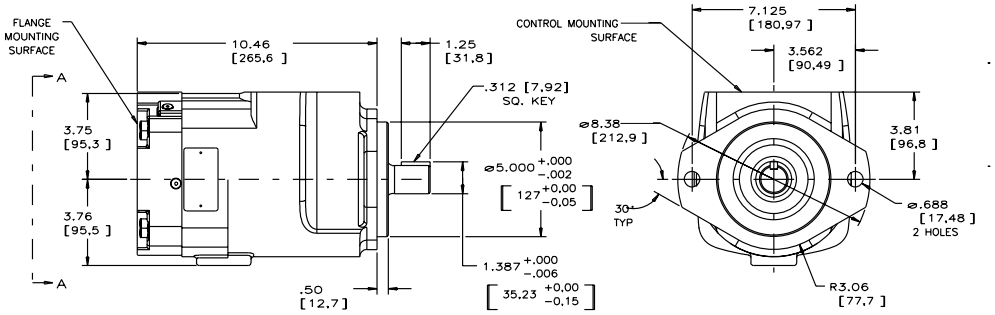

PRESSURE COMPENSATOR P-1NN • P-LNN

Ensures maximum pump flow until unit reaches preset control pressure setting then regulates output flow to match the requirements of the system while maintaining preset output pressure. Can be adjusted from 750 psi (52 bar) working pressure up to the maximum pressure rating of the applicable pump. "P-LNN" control provides a lower minimum pressure. Can be adjusted from 250 psi (17 bar) working pressure up to a maximum of 1500 psi (105 bar).

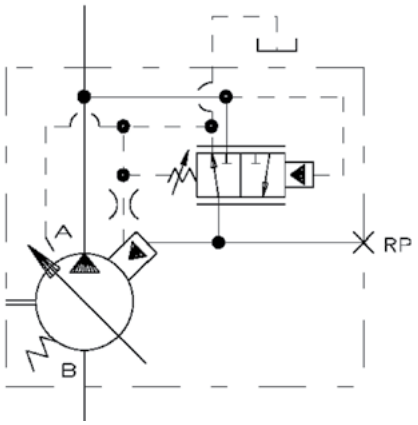

DUAL PRESSURE COMPENSATOR P-2NN

Works the same as the "P-1NN" control except it provides two independently adjustable pressure compensated settings as selected by an integral 2-way valve.

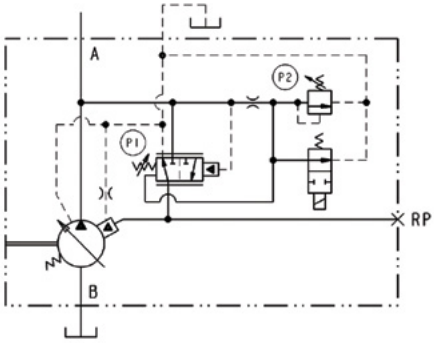

SOFT START PRESSURE COMPENSATOR P-KNN • P-CNN

Pump starts "softly" by going quickly at low pressure to a reduced flow setting, thereby reducing start up torque requirements. The "P-KNN" control uses a normally closed cartridge that will unload the pump at the minimum pressure setting with the solenoid energized. The "P-CNN" control uses a normally open cartridge that will unload the pump at the minimum pressure setting with no power to the solenoid.

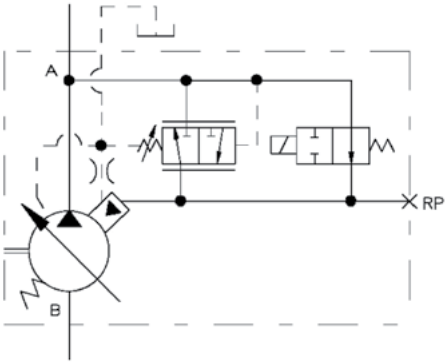

P-C (N.O.)

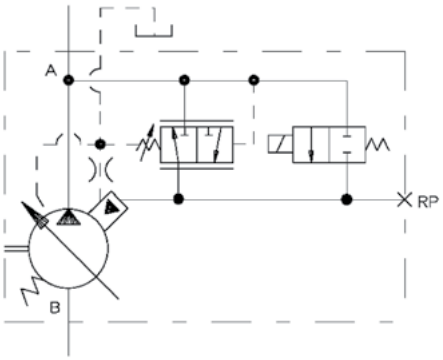

P-K (N.C.)

* Be sure system and pumps are protected against overloads with a high-pressure relief valve.

FIXED LOAD SENSE W/ PRESSURE COMPENSATOR P-1NN/F • P-LNN/F

A constant flow output is maintained for a given flow control valve setting regardless of changes in drive speed and/or working pressure. The pressure compensator control over rides the load sense control when system pressure reaches the preset control pressure. Control pressure can be adjusted from 750 psi (52 bar) up to the maximum pressure rating of the applicable pump. The P-LNN/F control provides a lower minimum pressure. It can be adjusted from 250 psi (17 bar) working pressure up to a maximum of 1500 psi (105 bar). Load sense differential for both versions is set at 170 PSID (11,7 bar). See page 50 for remote control options.

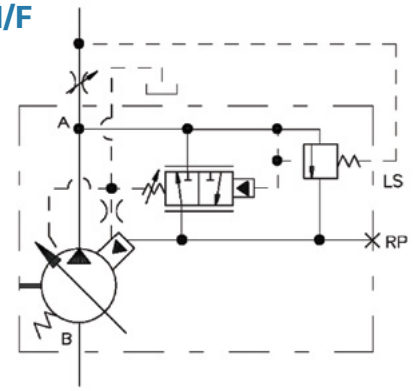

ADJUSTABLE LOAD SENSE W/ PRESSURE COMPENSATOR P-1NN/J • P-1NN/K

Same as the “P-1NN/F” and “P-LNN/F” controls except the load sense differential is externally adjustable. The adjustment range for the “P-1NN/J” control is 100 to 220 PSID (7 to 15 bar). The adjustment range for the “P-1NN/K” control is 225 to 350 PSID (15,5 to 24 bar).

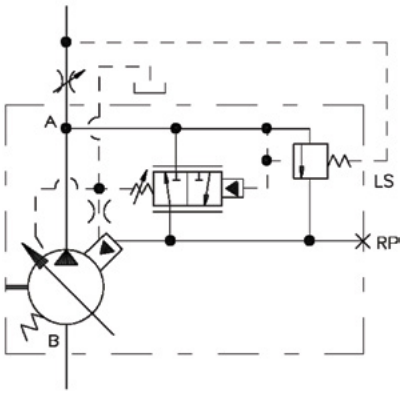

HORSEPOWER LIMITER W/ PRESSURE COMPENSATOR P-1NN/H

Automatically reduces delivery, as unit pressure rises, to limit horsepower consumption. The pressure compensator control over rides the horsepower control when system pressure reaches the preset control pressure. Control pressure can be adjusted from 750 psi (52bar) up to the maximum pressure rating of the applicable pump.

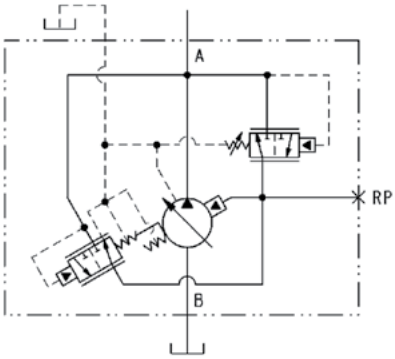

HORSEPOWER LIMITER W/ LOAD SENSE P-1NN/G • P-1NN/C • P-1NN/D

A constant flow output is maintained for a given flow control valve setting regardless of changes in drive speed and/or working pressure until (limited) horsepower setting is reached. Control then automatically reduces delivery, as unit pressure rises, to limit horsepower consumption. P-1/G has fixed load sense differential set at 170 PSID (11,7 bar). P-1/C has variable load sense differential adjustable from 100-220 PSID (7 to 15 bar). **P-1/D** is variable with differential adjustable from 225-350 PSID (15,5 to 24 bar).

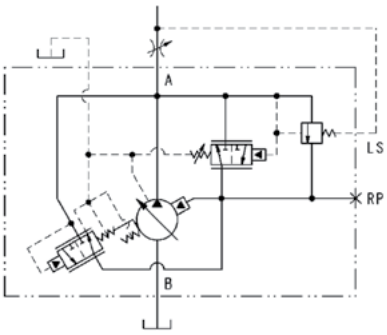

* Be sure system and pumps are protected against overloads with high-pressure relief valve.

LEVER OPERATED M-N

Varies displacement proportional to the rotation of a pintle.

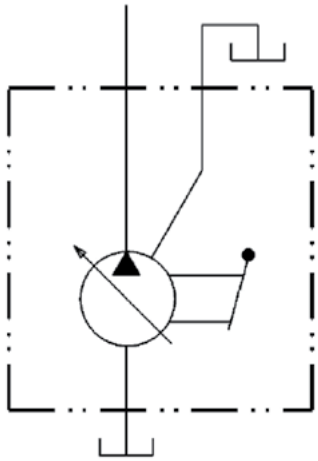

LEVER OPERATED W/ NEUTRAL BYPASS M-S

Varies displacement proportional to the rotation of a pintle which is equipped with a neutral bypass to prevent creep when centered.

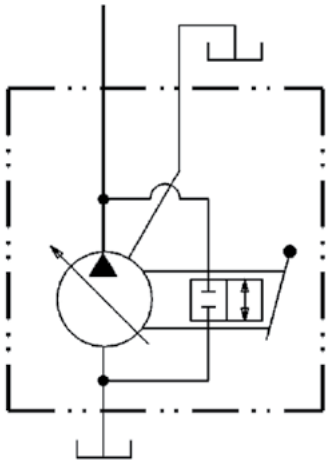

HANDWHEEL M-H

Provides simple handwheel adjustment of delivery.

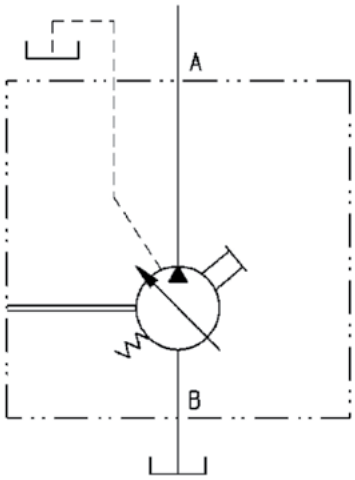

* Be sure system and pumps are protected against overloads with high-pressure relief valve.

Remote operation of pumps with load sense controls can be accomplished by installing a Remote Compensator Valve at the location shown in the control circuits.

SINGLE PUMP

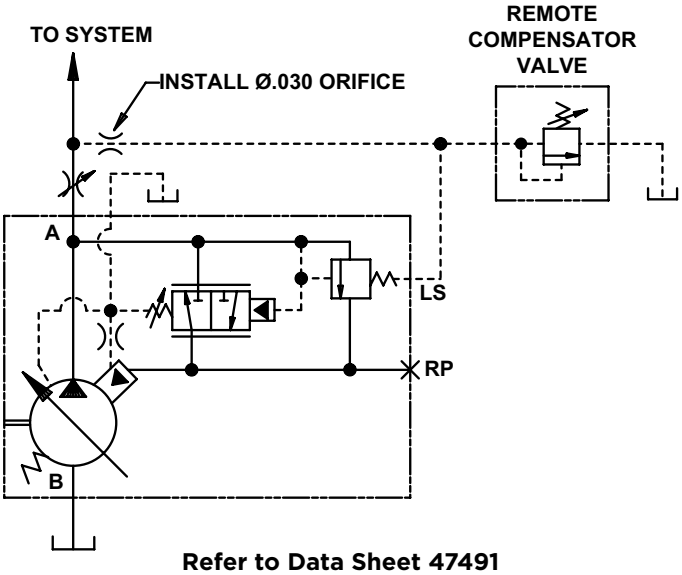

Refer to Data Sheet 47491

MULTIPLE PUMPS

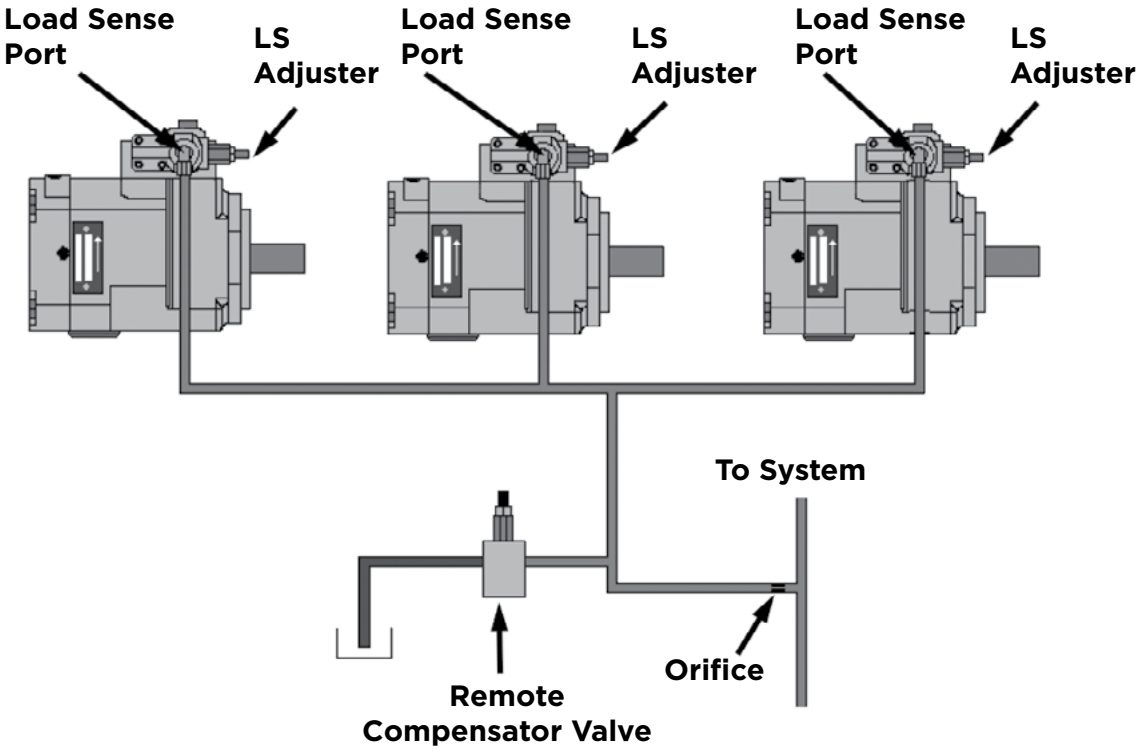

Refer to Data Sheet 47974A

CONTROL OPTION	DISPLACEMENT									
	A-FRAME			B-FRAME			C-FRAME			
	011	014	022	025	034	046	064	076	098	130
P-1NN	√	√	√	√	√	√	√	√	√	√
P-1NN/F	√	√	√	√	√	√	√	√	√	√
P-1NN/J	√	√	√	√	√	√	√	√	√	√
P-1NN/K	√	√	√	√	√	√	√	√	√	√
P-1NN/H	√	√	√	√	√	√	√	√	√	√
P-1NN/G	√	√	√	√	√	√	√	√	√	√
P-1NN/C	√	√	√	√	√	√	√	√	√	√
P-1NN/D	√	√	√	√	√	√	√	√	√	√
P-2NN							√	√	√	√
P-C	√	√	√	√	√	√	√	√	√	√
P-K	√	√	√	√	√	√	√	√	√	√
P-LNN	√	√	√	√	√	√	√	√	√	√
P-LNN/F	√	√	√	√	√	√	√	√	√	√
P-LNN/J	√	√	√	√	√	√	√	√	√	√
P-LNN/K	√	√	√	√	√	√	√	√	√	√
M-HNN	√	√	√	√	√	√	√	√	√	√
M-SNN	√	√	√							
M-NNN	√	√	√							

THE WORLD DEMANDS

OILGEAR

World Headquarters

231-929-1660

ussales@oilgear.com

1424 International Drive, Traverse City, MI 49686

www.oilgear.com

Americas **The Oilgear Company Fremont, NE Office**
905 South Downing St. Fremont, NE 68025 USA
Oilgear Mexicana S.A.
Calle Argentina 3913, Monterrey, 64930, Mexico
Oilgear do Brasil
Av. Ricardo Bassoli Cezare 1009, 13050-080 Campinas, Brazil

Europe **Oilgear Towler UK**
37 Burley Road, Leeds, LS3 1JT, United Kingdom
enquiries@oilgear.com
Oilgear Towler S.A.S.
5, Allée des Frères Montgolfier, 77183 Croissy-Beaubourg, France
oilgearfrance@oilgear.com
Oilgear Towler GmbH
Im Gotthelf 8, 65795 Hattersheim, Germany
info@oilgear.de
Oilgear Towler S.A.U.
Entidad Zikuñaga, 62, 20120, Hernani, Spain

Asia **Oilgear South Korea**
167-3 Techno 2-ro, Yuseong-gu, Daejeon City, 34025, South Korea
spark@oilgear.com
Oilgear China Co., Ltd.
3rd Floor, Bldg. A, No.3500 Xiupu Road, Shanghai, China

©2023 THE OILGEAR COMPANY
ALL RIGHTS RESERVED

910006 • FEB 2023