# Oilgear

## VPE, VSA, VSM

## PREFILL AND

## EXHAUST VALVE

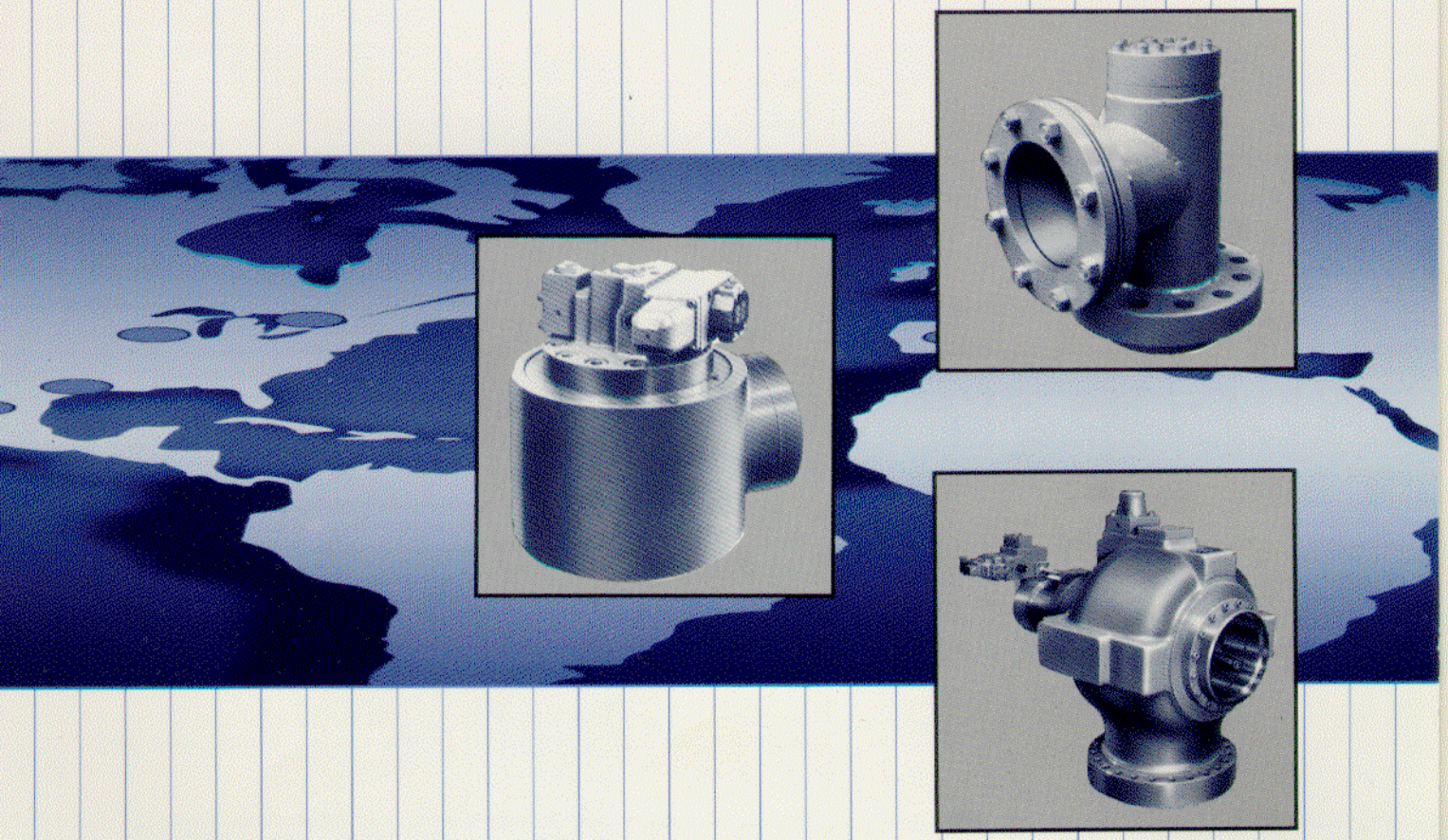

Bulletin #86000

# PERFORMANCE ASSURANCE IS STANDARD WITH EVERY OILGEAR COMPONENT

Every Oilgear prefill valve manufactured is shipped with a corporate commitment to support the component until it performs as specified.

This total dedication to performance is based upon experience gained since 1921 in matching fluid power equipment to a tremendous variety of machines and applications.

Oilgear's Performance Assurance is made possible because of experience gained over the years in supplying machinery builders and users with unique solutions to thousands of unusual fluid power problems.

Historically, Oilgear has concentrated its energies on hydraulic equipment and systems. Every Oilgear facility is staffed with factory trained and field experienced application engineers.

Performance Assurance doesn't stop with the design of the system or the sale of the component. Oilgear engineers will be there—when they are needed—supplying the technical support, field service, parts and repairs, to make sure each component operates correctly.

Oilgear
PERFORMANCE
ASSURANCE

# PREFILL AND EXHAUST VALVES

## Accommodate Fast Approach and Return Speeds For All Presses

Internationally known as a world class hydraulics company, Oilgear specializes in the design, engineering technology and equipment needed to solve difficult hydraulic problems by supplying the right components to meet specific needs.

Three styles of prefill and exhaust valves are part of Oilgear's long line of hydraulic components. Collectively they present a range of valves from which to choose. Individually, each has a distinct application advantage.

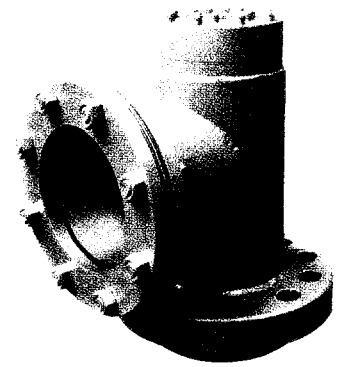

**VPE**
Two-way prefill and exhaust valves

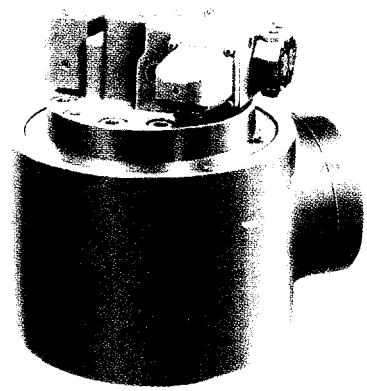

**VSA**
Three-way prefill and exhaust valves

**VSM**
Four-way prefill and exhaust valves

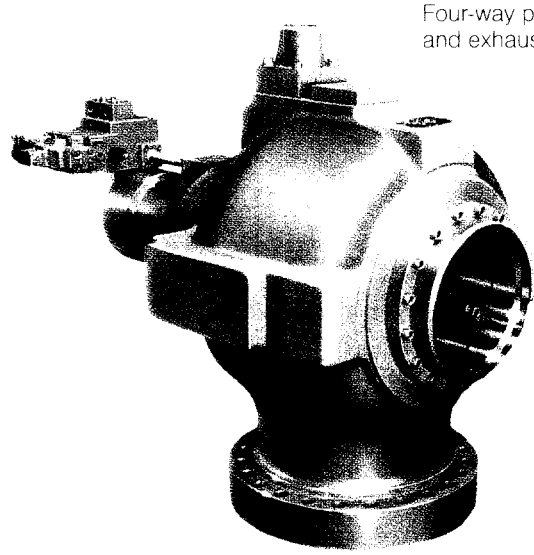

# CONTENTS

# VPE
# TWO-WAY PREFILL AND EXHAUST VALVES

Fast Response
- These proven and precision built prefill and exhaust valves are designed to accommodate main ram fast approach and return for high speed presses.

High Flow
- Flow rates to 6,864 USgpm (26,000 lpm) prefill. 15,852 USgpm (60,000 lpm) exhaust.

High Pressure Ratings
- Maximum pressures to 14,500 psi (1000 bar).

Pilot Return Spring 1

For All Fluids
- Can be used with a wide range of hydraulic fluids.

Operating Piston 2

Operating Cylinder 3

Valve Casing 4

Return Spring 5
- When the pressure differential across the main valve exceeds the spring force, the valve opens automatically allowing prefill.
- When the prefilling requirements are satisfied, the valve closes automatically.

Simple Construction and Design

Positive Seat
- Seated valves are virtually leak free.
- These valves operate with very high pressures, up to 14,500 psi (1000 bar).

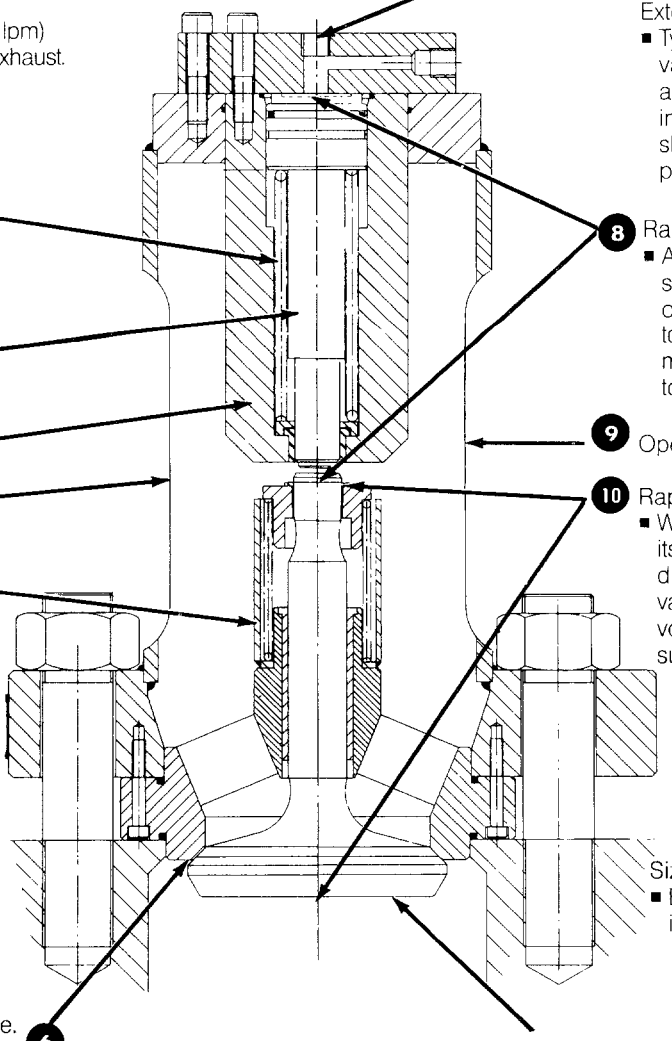

Press Cylinder

7 Pilot Supply Connection

Extensive Application Experience
- Typical applications for these two-way valves include—SMC presses, open and closed die forging presses, injection moulding machines, cable sheathing and lead cable presses, piercing presses, plus many more.

8 Rapid Exhaust
- After decompression, hydraulic pilot supply acts on the operating piston, overcoming the pilot return spring force to automatically depress and open the main valve. This permits hydraulic fluid to exhaust from press cylinder to tank.

9 Opening To Tank

10 Rapid Prefilling
- When the press ram is displaced on its approach stroke, a pressure differential is created across the main valve causing it to open permitting a large volume of hydraulic fluid to flow from supply, at low pressure, into the cylinder.

Sizes and Configurations
- Eight sizes are offered. Configurations include:

  Cylinder and 90° line connection
  Cylinder and straight line connection
  Cylinder and tank connection

11 Main Poppet

---

**CB**
Cylinder & 90 Line Connection

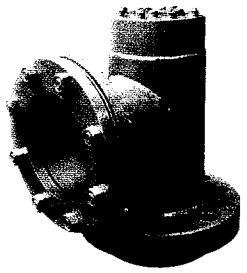

**CL**
Cylinder & Straight Line Connection

**CT**
Cylinder & Tank Connection

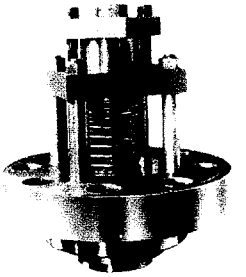

## Integral Decompression

- On applications such as hot metalworking, where integral decompression is desirable, special versions of the standard prefill and exhaust valves are available. These two-stage valves in size 130 thru 250, incorporate design features to decompress the hydraulic fluid in the cylinder at a controlled rate prior to automatic opening for rapid exhaust.

For All Fluids

- Can be used with a wide range of hydraulic fluids.

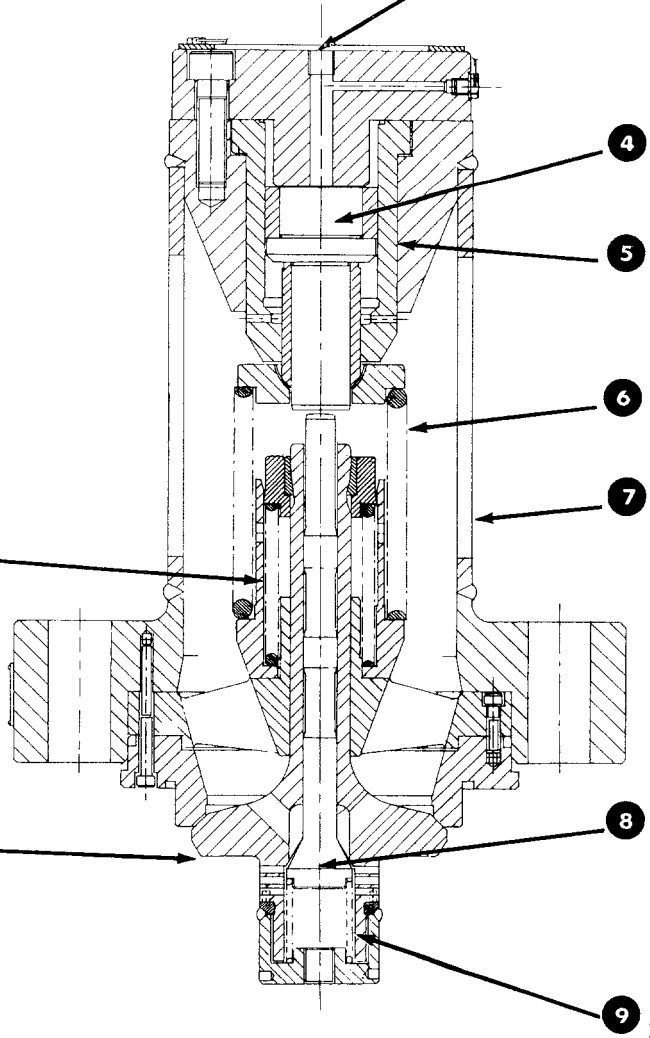

**3** Pilot Supply Connection

- The pilot supply of hydraulic fluid passing through the connection block causes the operating piston to open a decompression poppet within the main poppet.

**4** Operating Piston

**5** Operating Piston Cylinder

**6** Operating Piston Return Spring

**7** Opening To Tank

Main Poppet **1** Return Spring

Main Poppet **2**

- After decompression, further downward movement of the operating piston fully opens the main poppet to allow exhaust from the press cylinder.

**8** Decompression Poppet

- Permits the cylinder to decompress through progressively opening holes in the head of the main poppet.

**9** Decompression Poppet Return Spring

Press Cylinder

# VPE

# SPECIFICATIONS

## AVAILABILITY

| MOUNTING | | CB CYLINDER & 90° LINE CONNECTION | | | CL CYLINDER & STRAIGHT LINE CONNECTION | CT CYLINDER & TANK CONNECTION |
|---|---|---|---|---|---|---|
| MAXIMUM PRESSURE | psi | 7000 | 10,000 | 14,500 | 7000 | 7000 |
| | bar | 500 | 700 | 1000 | 500 | 500 |
| VALVE SIZE | | | | | | |
| 40 | | – | X | X | – | – |
| 50 | | – | X | X | – | – |
| 65 | | X | – | X | – | – |
| 90 | | X | – | – | X | X |
| 130* | | X | – | – | X | X |
| 190* | | X | – | – | X | X |
| 250* | | X | – | – | X | X |
| 300 | | X | – | – | X | X |

X Available
*Available with integral decompression.

## CONTROL SPECIFICATIONS

| VALVE SIZE | MOUNTING | STROKE | | PILOT AREA | | VOLUME TO OPEN | | AREA RATIO | SPRING PRESSURE | | MAXIMUM PRESSURE | |
|---|---|---|---|---|---|---|---|---|---|---|---|---|
| | | in. | mm | in.² | mm² | in.³ | cm³ | * | psi* | bar | psi | bar |
| 40 | CB | 0.69 | 17,6 | 1.53 | 957,0 | 1.03 | 16,8 | 1.0 | 50 | 3,4 | 10,000<br>14,500 | 700<br>1000 |
| 50 | CB | 0.69 | 17,6 | 1.53 | 957,0 | 1.03 | 16,8 | 1.63 | 54 | 3,7 | 10,000<br>14,500 | 700<br>1000 |
| 65 | CB | 0.69 | 17,6 | 1.53 | 957,0 | 1.03 | 16,8 | 2.1 | 52 | 3,6 | 7,000<br>14,500 | 500<br>1000 |
| 90 | CL & CT | 0.97 | 24,7 | 1.53 | 957,0 | 1.44 | 23,6 | 5.6 | 70 | 4,83 | 7,000 | 500 |
| 90 | CB | 0.99 | 25,0 | 1.53 | 957,0 | 1.46 | 23,9 | 5.6 | 70 | 4,83 | 7,000 | 500 |
| 130 | CL & CB | 1.62 | 41,0 | 3.80 | 2376,8 | 5.94 | 97,5 | 6.0 | 90 | 6,2 | 7,000 | 500 |
| 130 | CT | 1.58 | 40,0 | 3.80 | 2376,8 | 5.80 | 95,1 | 6.0 | 90 | 6,2 | 7,000 | 500 |
| 190 | all | 1.77 | 45,0 | 8.05 | 5028,6 | 13.80 | 226,3 | 6.0 | 58 | 4,0 | 7,000 | 500 |
| 250 | all | 2.76 | 70,0 | 9.08 | 5676,8 | 24.24 | 397,4 | 7.8 | 73 | 5,0 | 7,000 | 500 |
| 300 | all | 2.76 | 70,0 | 9.08 | 5676,8 | 24.24 | 397,4 | 10.3 | 73 | 5,0 | 7,000 | 500 |

*Used in calculation of Minimum Pilot Pressure = [Cylinder Pressure x Area Ratio] + Spring Pressure.

## DIMENSIONS*

| VALVE SIZE | MAX PRESSURE psi (bar) | MOUNTING | | | | | | | | | |
|---|---|---|---|---|---|---|---|---|---|---|---|
| | | **CB** CYLINDER & 90° LINE CONNECTION | | | | **CL** CYLINDER & STRAIGHT LINE CONNECTION | | | **CT** CYLINDER & TANK CONNECTION | | |
| | | "MF" in. (mm) | "F" in. (mm) | "H" in. (mm) | "W" lbs. (kg) | "MF" in. (mm) | "H" in. (mm) | "W" lbs. (kg) | "MF" in. (mm) | "H" in. (mm) | "W" lbs. (kg) |
| 40 | 10,000 (700) | 5.1 (130) | 3.1 (78) | 8.6 (219) | 20 (9) | – – | – – | – – | – – | – – | – – |
| | 14,500 (1000) | 5.5 (140) | 3.5 (90) | 8.6 (219) | 22 (10) | – – | – – | – – | – – | – – | – – |
| 50 | 10,000 (700) | 6.3 (160) | 3.8 (96) | 9.1 (230) | 35 (16) | – – | – – | – – | – – | – – | – – |
| | 14,500 (1000) | 7.1 (180) | 4.7 (118) | 9.1 (230) | 43 (19.5) | – – | – – | – – | – – | – – | – – |
| 65 | 7,000 (500) | 7.5 (190) | 5.0 (126) | 10.2 (260) | 69 (31.5) | – – | – – | – – | – – | – – | – – |
| | 14,500 (1000) | 8.7 (220) | 5.6 (141) | 10.2 (260) | 90 (41) | – – | – – | – – | – – | – – | – – |
| 90 | 7,000 (500) | 12 (305) | 8.7 (220) | 16.5 (420) | 115 (52) | 11 (280) | 13.7 (349) | 115 (52) | 12 (305) | 11.5 (293) | 115 (52) |
| 130 | 7,000 (500) | 13.8 (350) | 9.7 (245) | 19.8 (503) | 253 (115) | 13.8 (350) | 19.4 (493) | 275 (125) | 13.8 (350) | 19.8 (503) | 198 (90) |
| 190 | 7,000 (500) | 19.3 (490) | 12.6 (320) | 25.9 (658) | 517 (235) | 19.3 (490) | 25.6 (649) | 561 (255) | 19.3 (490) | 25.9 (658) | 451 (205) |
| 250 | 7,000 (500) | 24.1 (612) | 15 (380) | 29.5 (750) | 902 (410) | 24.1 (612) | 29.5 (750) | 979 (445) | 24.1 (612) | 29.5 (750) | 803 (365) |
| 300 | 7,000 (500) | 27.6 (700) | 18.1 (460) | 35.6 (903) | 1740 (790) | 27.6 (700) | 35 (895) | 1820 (625) | 27.6 (700) | 35.9 (913) | 1590 (720) |

*All dimensions are approximate. For specific information consult factory representative.

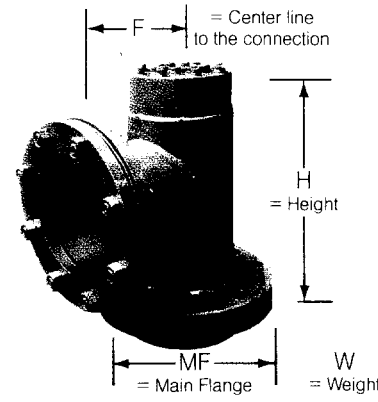

**VPE**

# PERFORMANCE CURVES*

**Pressure Drop vs. Flow**
**CL Cylinder & Straight Line Connection**

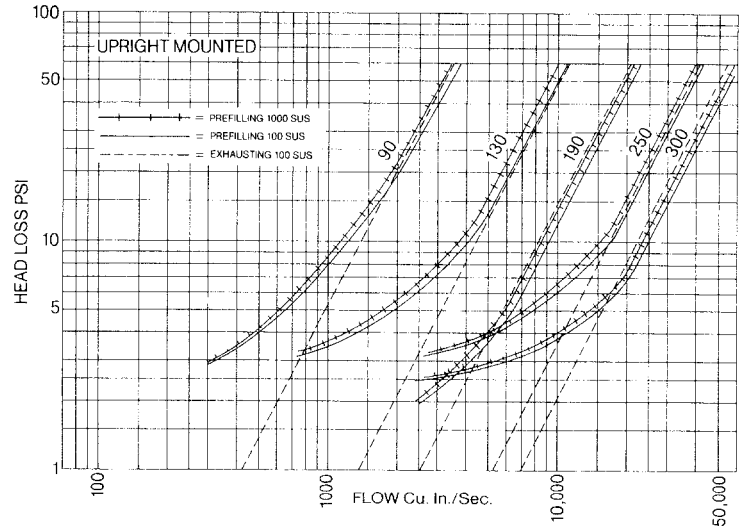


**Pressure Drop vs. Flow**
**CT Cylinder & Tank Connection**

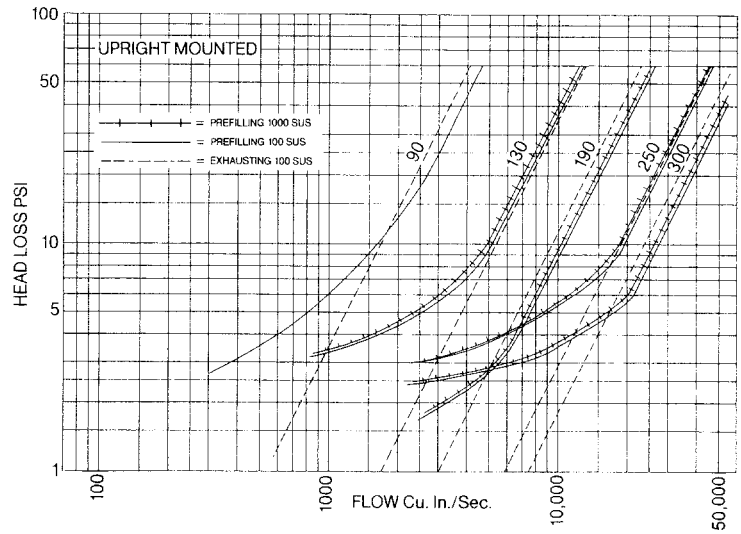


**Pressure Drop vs. Flow**
**CB Cylinder & 90° Line Connection**

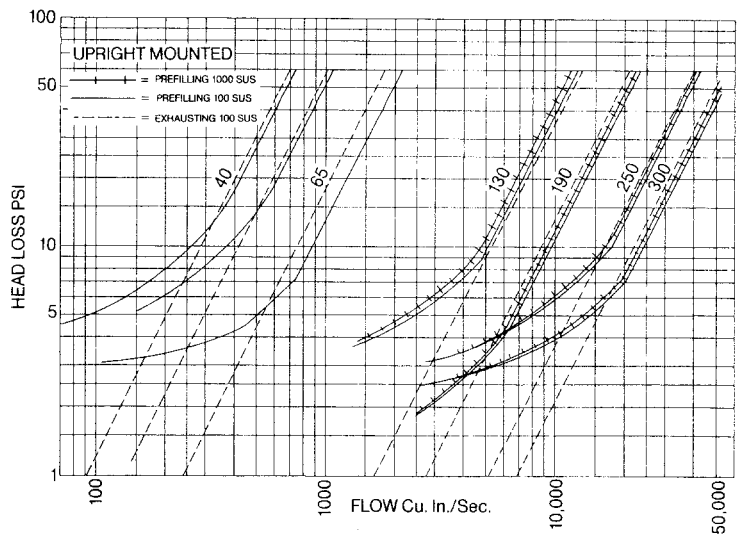


*For valves with internal decompression consult the factory for specifications.

# HOW TO ORDER

| BLOCK NUMBER EXPLANATION | 1 | 2 | 3 | 4 | 5 | 6 | 7 | 8 | 9 |
|---|---|---|---|---|---|---|---|---|---|
| TWO-WAY VALVE EXAMPLE | VPE | 040 | ST | CB | 07 | N | M | N | A1 |

**1** = UNIT
VPE = Two-way prefill and exhaust valve

**2** = VALVE SIZE (nominal mm)
040 = 40mm ( 1.5 in.)
050 = 50mm ( 2.0 in.)
065 = 65mm ( 2.5 in.)
090 = 90mm ( 3.5 in.)
130 = 130mm ( 5.0 in.)
190 = 190mm ( 7.5 in.)
250 = 250mm (10.0 in.)
300 = 300mm (12.0 in.)

**3** = DECOMPRESSION
ST = Standard without Decompression
SS = With Decompression (available in size 130, 190 and 250)
SP = Prefill Only w/o Operating Piston for Exhaust Opening

**4** = MOUNTING
CB = Cylinder and 90° Line Connection
CL = Cylinder and Straight Line Connection
CT = Cylinder in Tank Connection
(See table on page 6 for availability)

**5** = MAXIMUM PRESSURE
05 = 7,000 psi (500 bar)
07 = 10,000 psi (700 bar)
10 = 14,500 psi (1,000 bar)
(See table on page 6 for availability)

**6** = ADDITIONS
S = Sequence from Pilot Piston
P = Electrical Proximity Switch
C = Check/Choke on Pilot Piston Line
N = None
Note: Consult factory for availability

**7** DIMENSIONS
M = Metric
Y = Metric w/USA Fittings & Mounting Bolts for Customer Connections

**8** = SEALS
N = Buna -N (Standard)
V = Viton
Z = Special available on request; specify in writing.

**9** = DESIGN SERIES
01 = Assigned by factory

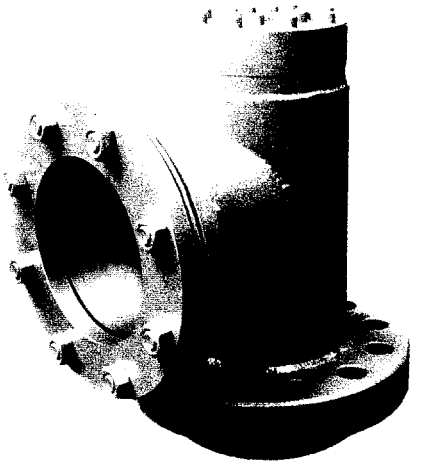

CONVERSIONS
PSI ÷14.5 = bar
USGPM x 3.79 = liters/min.
Inches$^2$ x 645.16 = mm$^2$
Inches$^3$ x 16.39 = cm$^3$
feet/sec. x 0.305 = m/sec.

# VSA
# THREE-WAY PREFILL AND EXHAUST VALVES

These fast shifting three-way prefill valves are used with hydraulic press circuits to gravity fill or exhaust press cylinder during rapid advance or return cycle. They include a port to connect pump to press cylinder during pressing cycle.

Press Cylinder Tell-Tale Rod 1
- Optional main plunger position indicator with integral micro switches is available.

Operator Head 2

Maintenance Friendly
- Control, operator and main plungers can be easily removed for inspection without disturbing the main body or shroud piping.

High Pressure Supply 3
- Automatically connects high pressure fluid to the press cylinder during pressing cycle.
- Eliminates the necessity of extra cylinder port.
- If a two-way function is desired, port 3 can be blocked.

Pressure Energized Seal Rings 5
- Pressure energized seal ring design increases service life and minimizes leakage.

Optional Shroud 6
- An optional shroud is available with a flange connection for installing valve external to tank.
- Shroud can be rotated 360° to simplify piping alignment.

Main Plunger 7
- Sliding seal provides smooth operation.

Compact and Shock Resistant
- All masses are centered—all controls are small and centrally located.

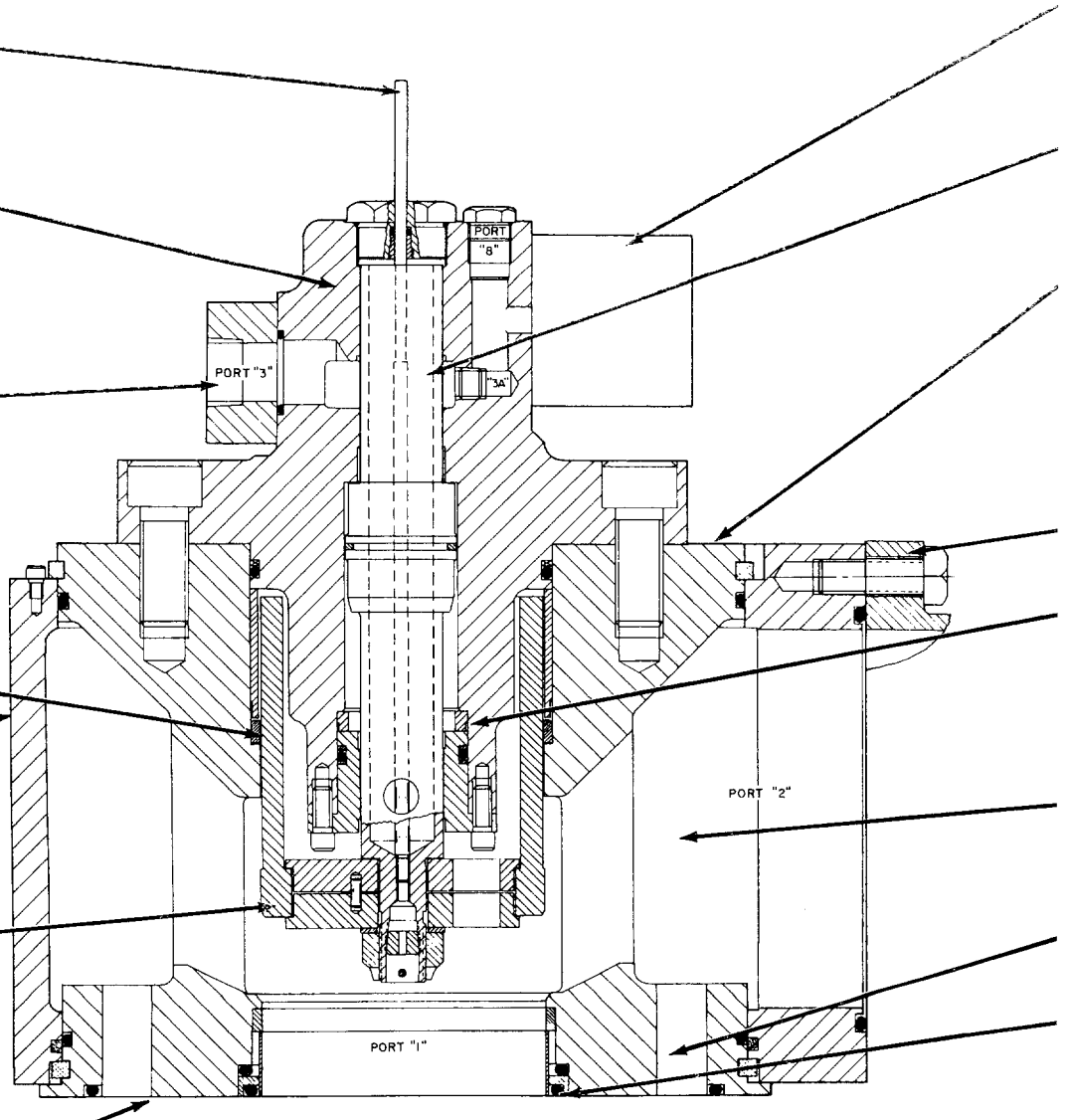


Flush Mounted Flange 8
- For easy flush mounting "in-tank" or on cylinder or manifold block with minimum machining.

For All Fluids
- Can be used with a wide variety of hydraulic fluids.

Extensive Applications Experiences
- Common three-way prefill valve installation such as extrusion presses, forging presses, press brakes, die casting machines, forming presses, hot plate presses, molding and casting machines, compression molders and high speed shears are only a few of Oilgear's modern industrial applications.

# SPECIFICATIONS

**9** Integral Control Module
- Standard control modules are available that operate through port 4 and 6 to open and close the main plunger.
- Custom controls available.

**10** Precision Operator Ram
- Smoothly operates the main plunger.

**4** Valve Body
- Has radially placed rectangular "gating" windows to allow flow between tank and cylinder. When open, these windows provide a flow area equal to or larger than nominal port size.

Size Range
- 100, 150, 200 and 250 mm (4," 6," 8," and 10") sizes available.

**11** Flange
- Included with shroud.

**12** Dashpot
- Integral dashpot cushions the operating ram protecting the unit against mechanical shocks.

Versatile
- Valve can be mounted in any position.

**13** Tank Port
- Large flow passage minimizes flow resistance and turbulence.

**14** Flange Mounting
- Use of short mounting bolts minimizes valve body distortion.

**15** Sealing Ring
- Cylinder port includes pressure balanced sealing ring—allows flush mounting of valve.

Piston Ring
- Minimizes pilot piston leakage to assure consistent control.

Rated Pressure
- 5000 psi (345 bar).

## DIMENSIONS with SHROUD*

| VALVE SIZE | | | "W" WIDTH | | "L" LENGTH | | "H" HEIGHT | | WEIGHT | |
|---|---|---|---|---|---|---|---|---|---|---|
| Model | in. | mm | in. | mm | in. | mm | in. | mm | lb | kg |
| 100 | 4 | 100 | 13 | 312 | 15 | 381 | 16 | 390 | 180 | 82 |
| 150 | 6 | 150 | 17 | 432 | 21 | 525 | 19 | 480 | 400 | 182 |
| 200 | 8 | 200 | 21 | 534 | 26 | 658 | 26 | 647 | 740 | 336 |
| 250 | 10 | 250 | 27 | 686 | 34 | 845 | 31 | 772 | 2265 | 1028 |

*All dimensions are approximate. For specific information consult factory representative.

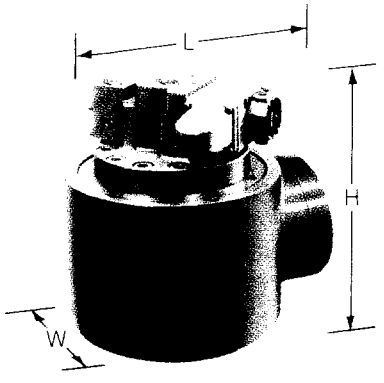


## CONTROL SPECIFICATIONS

| UNIT SIZE | | | STROKE | | PILOT AREA | | PILOT VOLUME* | |
|---|---|---|---|---|---|---|---|---|
| Model | in. | mm | in. | mm | $in.^2$ | $mm^2$ | $in.^3$ | $cm^3$ |
| 100 | 4 | 100 | 1.81 | 46.0 | 1.18 | 761 | 2.13 | 34.9 |
| 150 | 6 | 150 | 2.56 | 65.0 | 2.02 | 1303 | 5.19 | 85.0 |
| 200 | 8 | 200 | 3.25 | 82.6 | 3.09 | 1994 | 10.05 | 164.7 |
| 250 | 10 | 250 | 3.88 | 98.6 | 3.14 | 2026 | 12.18 | 199.6 |

*Volume necessary to shift from open to close or close to open.
Note: System should be decompressed to 250 psi (17,2 bar) or less before opening prefill.

## CONTROL SPECIFICATIONS (continued)

| UNIT SIZE | | | MINIMUM PILOT PRESSURE | | RATED PRESSURE | |
|---|---|---|---|---|---|---|
| Model | in. | mm | psi | bar | psi | bar |
| 100 | 4 | 100 | 80 | 5.5 | 5000 | 345 |
| 150 | 6 | 150 | 80 | 5.5 | 5000 | 345 |
| 200 | 8 | 200 | 80 | 5.5 | 5000 | 345 |
| 250 | 10 | 250 | 100 | 6.9 | 5000 | 345 |

# VSA

# CONTROL MODULES

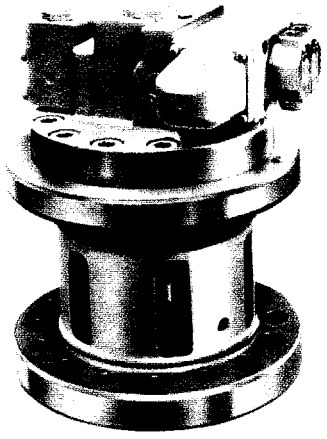

## Control Modules
Control modules are an integral part of Oilgear's "VSA" Prefill units. Functional controls are available for greater flexibility and optimum circuit design. Special controls can be designed on request. The correct control selection can greatly simplify your system.

## Resistance Control
Has a built-in resistance valve connected to port 6. When pressure builds up (at port 6) to an adjustable preset value (from 1250 to 5000 psi—86 to 345 bar), the resistance valve opens, porting fluid to operating ram and closing the main plunger. When pressure at port 6 is reduced, pilot pressure applied to port 4 will open the valve. Opening rate is adjusted through the check/choke which meters fluid from the closed end of operating ram back to port 6.

## Solenoid Control
A solenoid operated 4-way valve directs pilot fluid and pressure (up to 5000 psi—345 bar) to open or close the prefill as commanded by an electrical signal.

## Plain Control
Pressure at port 6 closes the main prefill plunger and pressure at port 4 opens it.

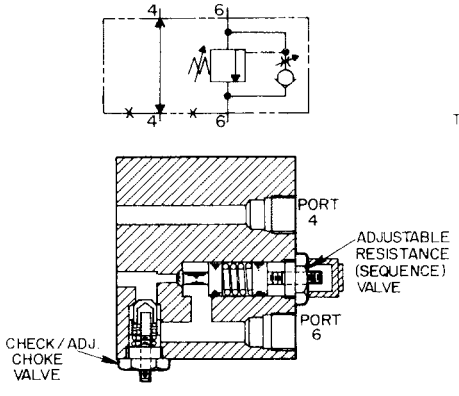


**Type "T"**
**Resistance Control.**

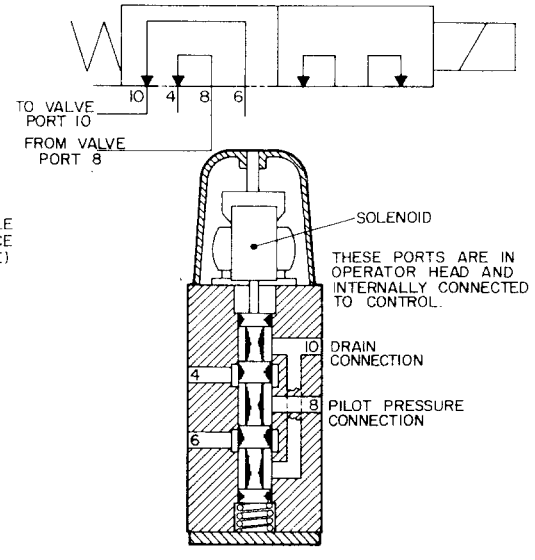


**Type "C"**
**Solenoid Control.**

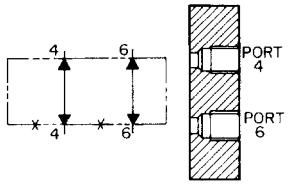


**Type "P"**
**Plain Control.**

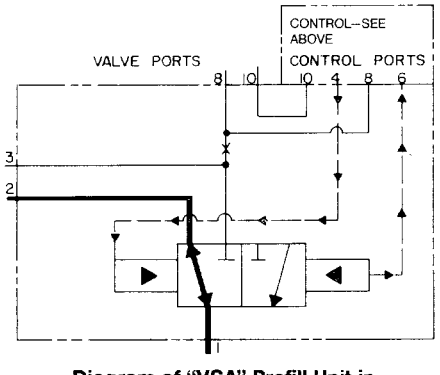


**Diagram of "VSA" Prefill Unit in open position**

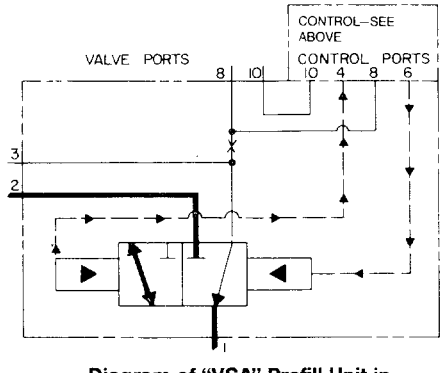


**Diagram of "VSA" Prefill Unit in closed position.**

# PERFORMANCE SPECIFICATIONS

## SIZE 100

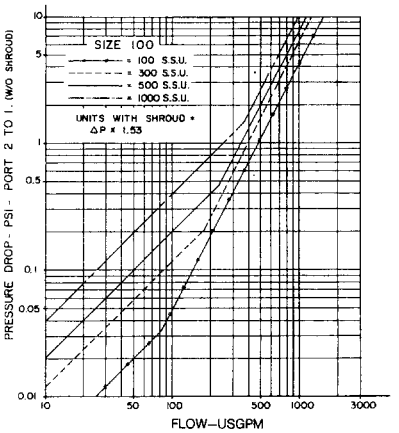


Pressure Drop vs Flow Port 2 to Port 1

## SIZE 150

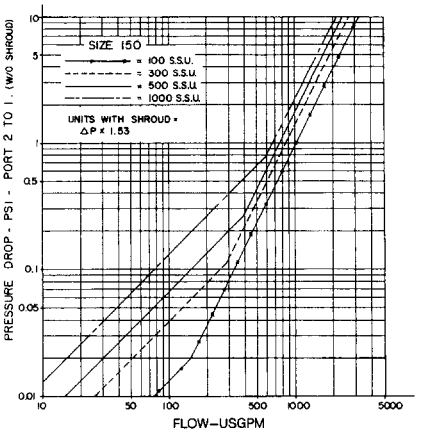


Pressure Drop vs Flow Port 2 to Port 1

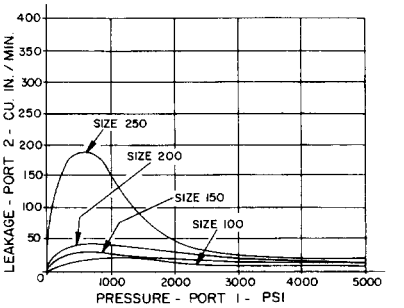


Average Leakage (Port 1 to 2) vs Line Pressure
Typical for 500 SSU fluid

## SIZE 200

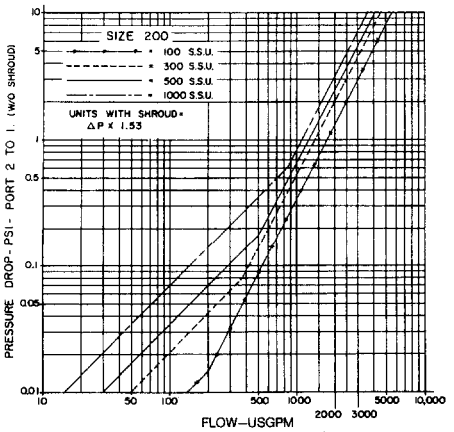


Pressure Drop vs Flow Port 2 to Port 1

## SIZE 250

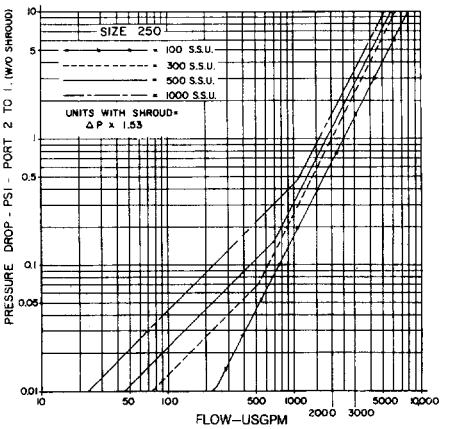


Pressure Drop vs Flow Port 2 to Port 1

CONVERSIONS
PSI ÷14.5 = bar
GPM x 3.79 = liters
Inches$^2$ x 645.16 = mm$^2$
Inches$^3$ x 16.39 = cm$^3$
feet/sec. x 0.305 = m/sec.

## ALL SIZES

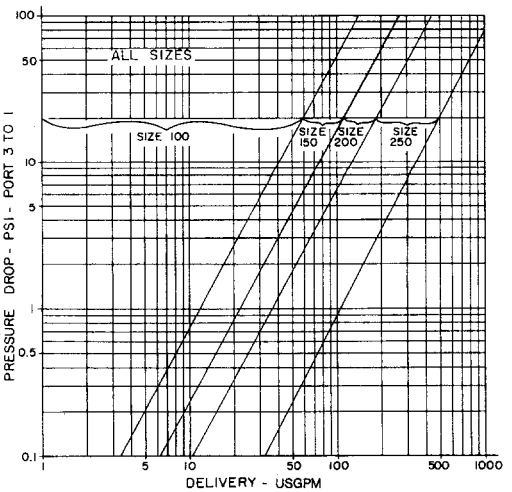


Pressure Drop vs Flow, Port 3 to Port 1
Performance typical of 300 SSU fluid. For other oil viscosities, $\Delta$ P corrected = ($\Delta$ P) (0.241) (SSU$^{.25}$). For fluids other than oil, $\Delta$ P = ($\Delta$ given) (Specific Gravity of fluid) ÷ 0.85.

## ALL SIZES

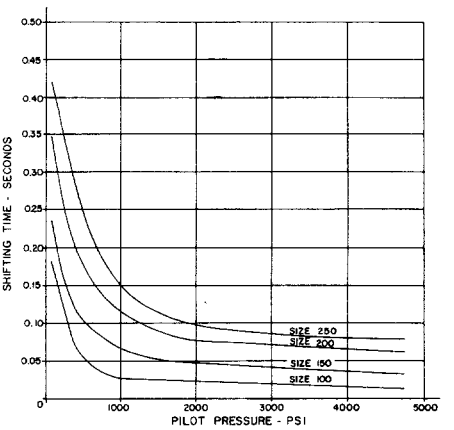


Shift time vs Flow
Performance typical for solenoid control, with accumulator at control pressure supply inlet, and for fluids up to 1000 SSU. See chart for control specifications.

# HOW TO ORDER

| BLOCK NUMBER EXPLANATION | 1 | – | 2 | – | 3 | 4 | 5 | 6 | / | 7 | / | 8 | 9 | 10 |
|---|---|---|---|---|---|---|---|---|---|---|---|---|---|---|
| THREE-WAY VALVE EXAMPLE | VSA | – | 100 | – | P | M | N | N | / | 01 | / | K | 7 | B |

**1** = Unit
VSA = Three-way Prefill and Exhaust Valve

**2** = Valve Size (nominal mm)
100 = 100 mm (4")
150 = 150 mm (6")
200 = 200 mm (8")
250 = 250 mm (10")

**3** = Operator
P = Plain
R = Resistance
C = CETOP 05 Solenoid Valve
N = CETOP 5 mtg. without valve
H = Solenoid CETOP 05P Valve
F = CETOP 5 valve w/meter out flow control module at directional ports

**4** = TELL TALE
M = Proximity Limit Switch (Inductive Type)
L = Proximity Limit Switch (Non-Induction Type)
N = None

**5** = CONTROL PLUNGER MODS
N = None (Standard)
S = Port 5 Inlet Option (Size 150, 200 & 250 only)
I = Interlock
L = Interlock & Port 5 Inlet Option

**6** = SHROUD
N = None
S = With Shroud
G = With Shroud—Water Glycol Service
K = Without Shroud—Water Glycol Service

**7** = DESIGN STYLE
01 = Assigned by factory

**8** = CONNECTOR
N = PG-11
P = PG-11 w/light
Q = PG-11 w/rectifier
Y = PG-11 w/light & rectifier
K = .500 NPT (Standard)
W = .500 NPT w/light
H = .500 NPT w/rectifier
L = .500 NPT w/light & rectifier
B = Conduit Box w/.500 NPT & Light

**9** = SOLENOID VOLTAGE
0 = 115/60—110/50*
1 = 230/60--220/50*
2 = 12 VDC
3 = 24 VDC
6 = 220/50
7 = 115/60
8 = 110/50
9 = 230/60
*With "B" Connector Only

**10** = PILOT VALVE SEALS
B = Buna—N (Standard)
V = Viton

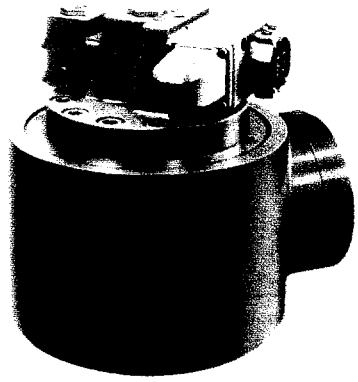

# VSM
# FOUR-WAY PREFILL AND EXHAUST VALVES

Tell Tale
- An optional ram position indicator is available with integral micro switches to provide positive interlocking for proper sequencing of functions and/or safety interlocking.

Port 4
- Pilot fluid at port 4 shifts control piston and main plunger from closed to open position at a speed determined by pilot flow or unit control.

Port 3 Option
- Multiple high pressure supply ports available to provide increased capacity and/or flexibility of piping.

Port 5 Option
- Multiple auxiliary cylinder ports are available which can be used to increase the valve's ability to pass fluid from the pump source into the cylinder.
- Port 5 is open to port 1 at all times. Port 5 can be used to unload the pumps. Pressure switch, pressure transducers, etc. mounted on port 5 can sense cylinder pressure.

Built-In Port 7 Interlock
- The spool type four-way multi-ported valve design provides a built-in interlock between valve ports.

No Entry Valve Required
- Due to the interlocking spool function you can have individual prefill valves on multiple cylinders for multiple tonnage and speeds. There is no need for a valve to block off the flow from pump to the cylinders not being pressurized.

Large valves up to 400 mm (16")
- Large valves provide for large flow rates.

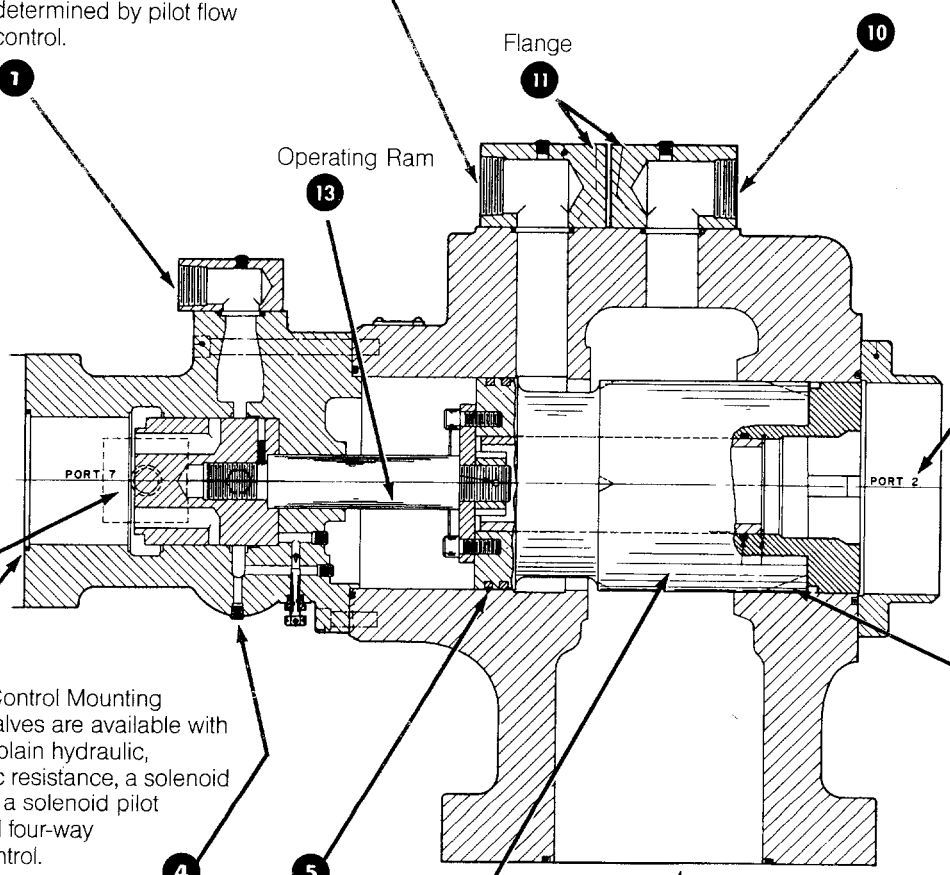


Cylinder Control Mounting
- These valves are available with either a plain hydraulic, hydraulic resistance, a solenoid valve, or a solenoid pilot operated four-way valve control.

Decompression Slots
- Controlled decompression of stored up energy leaving the main cylinder reduces hydraulic shocks.
- Units with adjustable open/close cushions for controlled decompression as well as "interlock" options are available.

Built-In Adjustable Cushion
- On 250 valves and larger there is a built-in check valve and choke to cushion closing of the main plunger.
- Sizes 100 to 200 are available with port "B" for installing a check valve and adjustable choke.

Piston Rings

Main Plunger
- Sliding spool provides smooth operation.

Rated Pressure
- 3500 psi (241 bar)

Port 1 Flush Mounted
- Flange mounted directly to top of cylinder for easy mounting with minimum machining.

Many Sizes
- 75, 100, 150, 200, 250, 300, 350 and 400 mm (3," 4," 6," 8," 12," 14," & 16") sizes are available.

Extensive Application Experience
- Oilgear has been designing and building fluid power components and systems since 1921.
- Common 4-way prefill valve installations such as extrusion presses, forging presses, forming presses, "O"ing and "U"ing presses, hot plate presses, molding and casting machines, compression molders and high speed shears are only a few of Oilgear's modern industrial applications.

# VSM
# SPECIFICATIONS

## CONTROL SPECIFICATIONS

| VALVE SIZE | | "C" STROKE | | "A" AREA | | CLOSING VOLUME | | OPENING VOLUME | | MINIMUM PILOT PRESS. | | RATED PRESSURE | |
|---|---|---|---|---|---|---|---|---|---|---|---|---|---|
| mm | in. | in. | mm | in.$^2$ | mm$^2$ | in.$^3$ | cm$^3$ | in.$^3$ | cm$^3$ | psi | bar | psi | bar |
| 75 | 3 | 1.9 | 49 | 9 | 228 | 17 | 284 | 17 | 284 | 125 | 9 | 3500 | 241 |
| 100 | 4 | 2.3 | 57 | 7 | 180 | 16 | 261 | 7 | 114 | 300* | 21 | 3500 | 241 |
| 150 | 6 | 3.3 | 83 | 7 | 180 | 23 | 376 | 13 | 209 | 300* | 21 | 3500 | 241 |
| 200 | 8 | 4.8 | 121 | 12 | 300 | 56 | 918 | 33 | 536 | 300* | 21 | 3500 | 241 |
| 250 | 10 | 5.2 | 132 | 28 | 718 | 147 | 2406 | 121 | 1989 | 300* | 21 | 3500 | 241 |
| 300 | 12 | 5.7 | 144 | 28 | 718 | 155 | 2549 | 128 | 2106 | 300* | 21 | 3500 | 241 |
| 350 | 14 | 5.7 | 144 | 28 | 718 | 155 | 2549 | 128 | 2106 | 300* | 21 | 3500 | 241 |
| 400 | 16 | 6.3 | 159 | 28 | 718 | 177 | 2899 | 146 | 2396 | 300* | 21 | 3500 | 241 |

*Units for operating at lower pressure available on request.

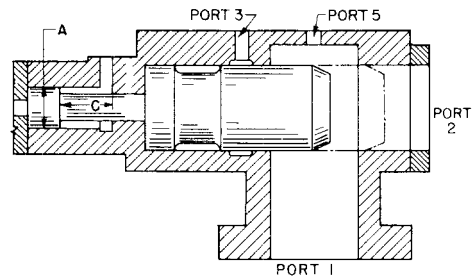


## DIMENSIONS*

| VALVE SIZE | | "W" WIDTH | | "L" LENGTH | | "H" HEIGHT | | WEIGHT | |
|---|---|---|---|---|---|---|---|---|---|
| mm | in. | in. | mm | in. | mm | in. | mm | lb | kg |
| 75 | 3 | 11 | 280 | 22 | 556 | 13 | 315 | 225 | 496 |
| 100 | 4 | 10 | 247 | 27 | 676 | 15 | 361 | 300 | 137 |
| 150 | 6 | 22 | 557 | 39 | 967 | 21 | 527 | 720 | 327 |
| 200 | 8 | 26 | 659 | 45 | 1137 | 26 | 654 | 1240 | 536 |
| 250 | 10 | 33 | 832 | 53 | 1326 | 35 | 870 | 2850 | 1294 |
| 300 | 12 | 38 | 964 | 57 | 1428 | 40 | 1003 | 3500 | 1589 |
| 350 | 14 | 45 | 1142 | 62 | 1566 | 49 | 1232 | 6000 | 2724 |
| 400 | 16 | 50 | 1256 | 67 | 1701 | 55 | 1397 | 8500 | 3859 |

*All dimensions are approximate. For specific information consult factory representative.

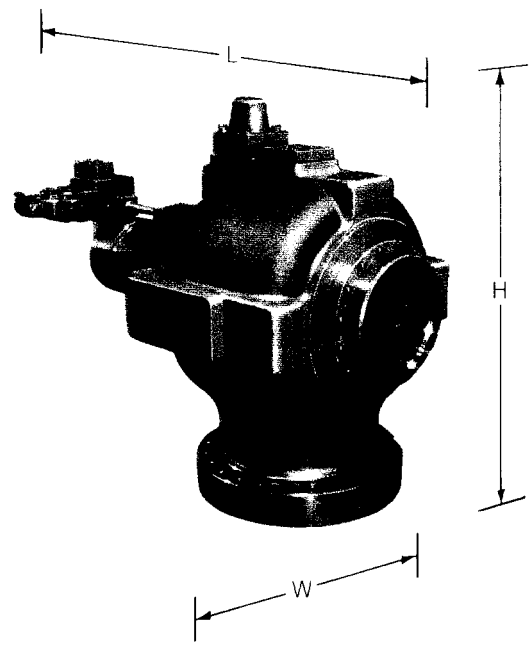

# CONTROLS

## Plain Control

This simple double-acting cylinder control shifts main plunger when fluid is alternately directed to piston or rod end.

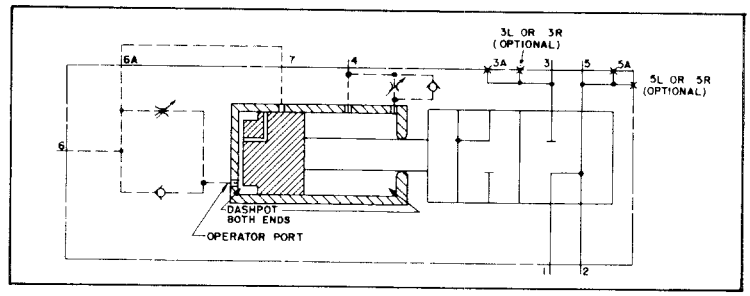


## Resistance Valve Control

Piston end head of control has built-in resistance valve, adjustable from 500 to 3500 psi (35-241 bar), to resist flow for closing plunger until a preset pressure is reached. If the pressure at port 6 is below the setting of the sequence valve, the pressurized fluid at port 4 opens valve.

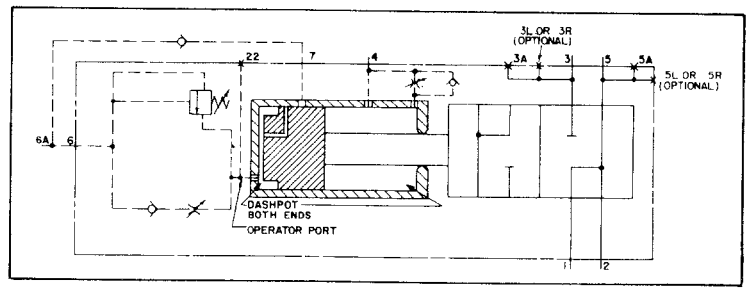


## CETOP Pilot Operated 4-Way Valve Control

A CETOP solenoid operated pilot valve shifts a four-way valve manifolded to operator end head and directs flow to open and close the main plunger.

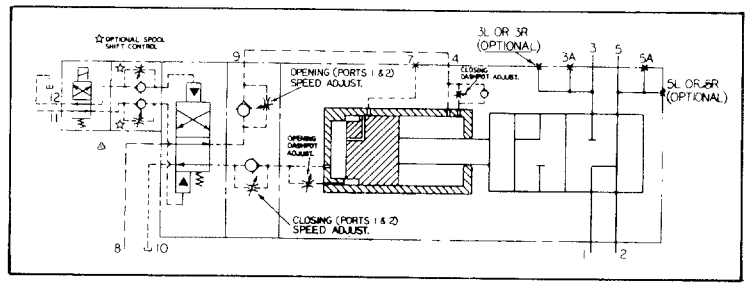


## Interlock Operator Pistons

Optional interlock port 7, permits fluid entering port 4 on ram end of control to flow out port 7 when main plunger is open. Can be furnished with any of the above controls on units 100 mm (4") through 400 mm (16").

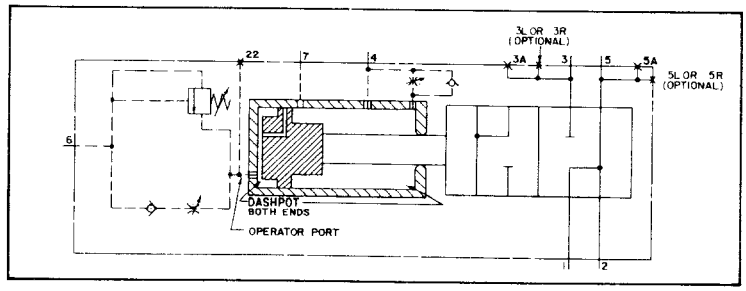

# VSM

# PERFORMANCE SPECIFICATIONS

## SIZE 100

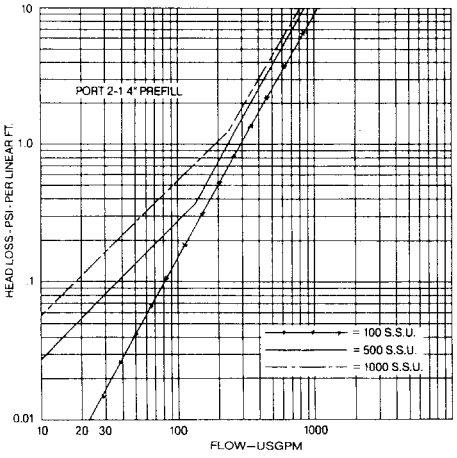


Pressure Drop vs Flow, Port 2 to Port 1

## SIZE 150

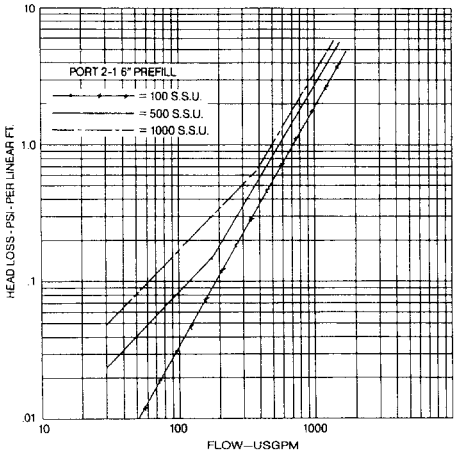


Pressure Drop vs Flow, Port 2 to Port 1

## SIZE 200

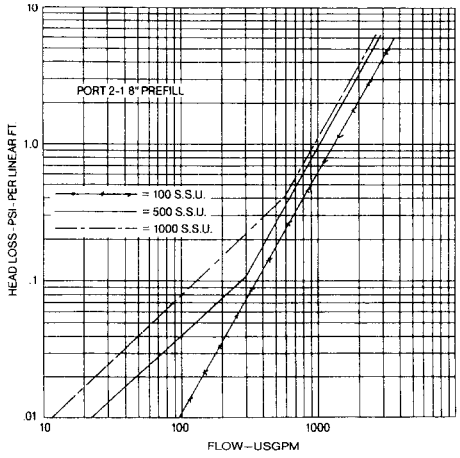


Pressure Drop vs Flow, Port 2 to Port 1

## SIZE 250

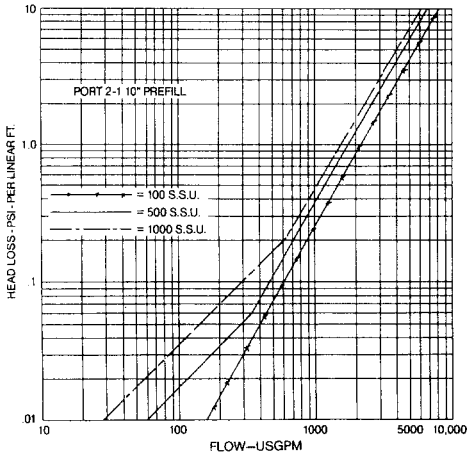


Pressure Drop vs Flow, Port 2 to Port 1

## SIZE 300

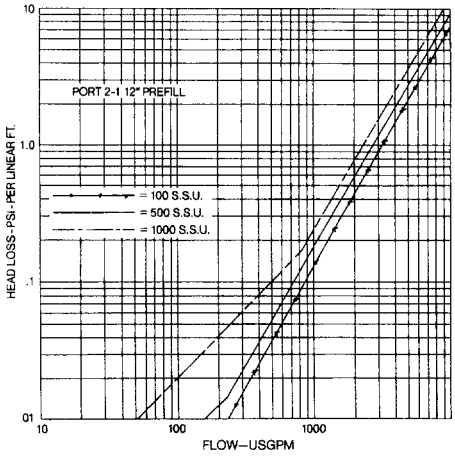


Pressure Drop vs Flow, Port 2 to Port 1

## SIZE 350

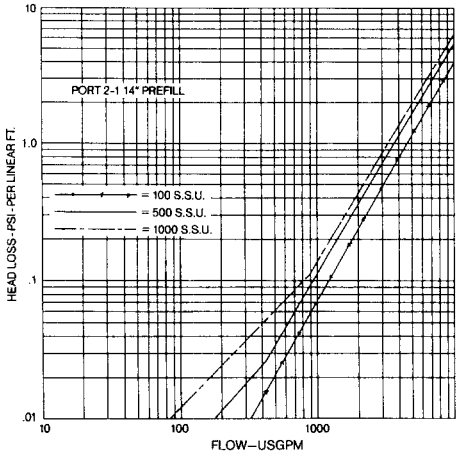


Pressure Drop vs Flow, Port 2 to Port 1

## SIZE 400

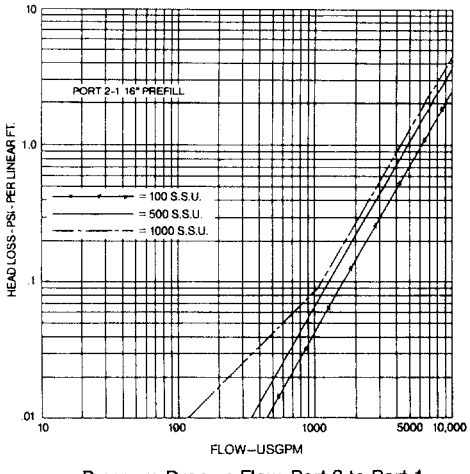


Pressure Drop vs Flow, Port 2 to Port 1

## ALL SIZES

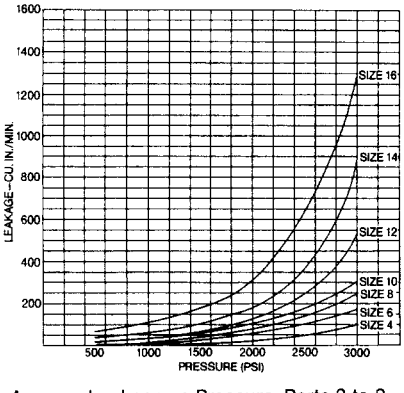


Average Leakage vs Pressure, Ports 3 to 2 with valve closed

## ALL SIZES

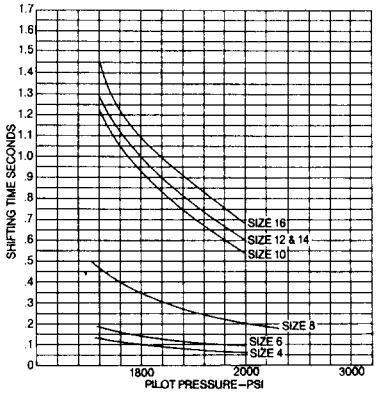


Shift Time to Close vs Pressure

Modular prefill (VSM100 TYPE) closing choke backed out HSF802 flow control open

# HOW TO ORDER

| BLOCK NUMBER EXPLANATION | 1 | – | 2 | – | 3 | 4 | 5 | 6 | 7 | 8 | / | 9 | / | 10 | 11 | 12 |
|---|---|---|---|---|---|---|---|---|---|---|---|---|---|---|---|---|
| FOUR-WAY VALVE EXAMPLE | VSM | – | 10 | – | C | V | N | S | N | S | / | 01 | / | K | O | B |

**1** = UNIT
VSM = Four-way Prefill and Exhaust Valve

**2** = VALVE SIZE (Nominal mm)
75 = 75 mm (3")
100 = 100 mm (4")
150 = 150 mm (6")
200 = 200 mm (8")
250 = 250 mm (10")
300 = 300 mm (12")
350 = 350 mm (14")
400 = 400 mm (16")

**3** = OPERATOR
C = w/CETOP 4-way valve
N = CETOP Mounting Without Valve
P = Plain
R = Resistance

**4** = TELL TALE
V = Visual
T = Open and Close Limit Switch
S = Open only Limit Switch
N = None

**5** = CONTROL PISTON MODIFICATIONS
N = None
I = Interlock

**6** = SPOOL SHIFT SPEED CONTROL
S = Spool Shift Speed Control
W = Port 4-9 Piped
B = Port 4-9 Piped and w/Spool Shift Speed Control
N = No opening speed adjustment, closing adjustment or spool shift speed control

**7** = ADDITIONAL PORT "3"s & "5"s
N = Standard—one Port "3" and one Port "5"
3 = three Port "3"s
5 = three Port "5"s
B = three Port "3"s and three Port "5"s

**8** = CLOSING DASHPOT
S = Standard—Size 10 and larger
D = Closing Dashpot (Size 200 only)
N = No Dashpot (Size 200 only)

**9** = DESIGN STYLE
01 = Assigned by factory

**10** = CONNECTOR
N = PG—11
P = PG—11 w/Light
Q = PG—11 w/Rectifier
Y = PG—11 w/Light & Rectifier
K = .500 NPT (Standard)
W = .500 NPT w/Light
H = .500 NPT w/Rectifier
L = .500 NPT w/Light & Rectifier
B = Conduit Box w/.500 NPT & w/Light

**11** = SOLENOID VOLTAGE
0 = 115/60—110/50*
1 = 230/60—220/50*
2 = 12 VDC
3 = 24 VDC
6 = 220/50
7 = 115/60
8 = 110/60
9 = 230/60
*With "B" Connector Only

**12** = PILOT VALVE SEALS
B = Buna—N (Standard)
V = Viton

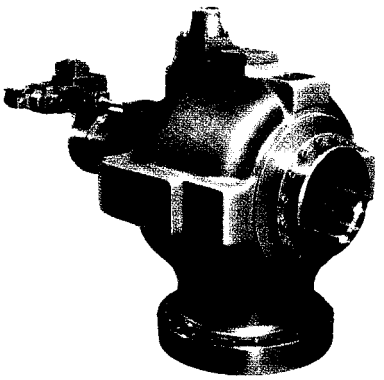

CONVERSIONS
PSI ÷14.5 = bar
USGPM x 3.79 = liters/min.
Inches$^2$ x 645.16 = mm$^2$
Inches$^3$ x 16.39 = cm$^3$
feet/sec. x 0.305 = m/sec.

# APPLICATION GUIDE LINES

An atmospheric prefill valve functions on the basis of a vacuum being generated in the main cylinder. Pressure differential between the vacuum and atmospheric pressure causes fluid to flow into the cylinder. The maximum vacuum allowable in the cylinder during prefill is a function of several variables including the amount of air present in the fluid, machine cycle and cylinder seals exposed to the vacuum.

When applying prefill valve type VSA and VSM, which are open and closed by pilot cylinder, timing of opening and closing functions are critical. If the valve is not opened before movement starts or is closed before the cylinder stops moving, complete filling may not take place.

The VPE check type prefill is opened and closed by the cylinder to atmospheric pressure differential. It therefore takes care of the opening/closing timing automatically.

Maximum discharge capacity is limited by pressure drop and prefill pipe flow dynamics. Excessive pressure drops in the prefill valve on return may generate a force large enough so that the return cylinders cannot achieve the return speed desired. Dynamic conditions in prefill return pipes involving length of prefill piping velocity, of return oil, acceleration and deceleration of the column can result in water hammer and extreme shock.

Due to the complexity in dealing with the variables referred to above, care should be exercised in the selection of a prefill valve.

For special installations or assistance in valve selections consult your Oilgear representative.

CALCULATIONS

- Refer to figures 1, or 2, or 3. Determine head "H" (in feet) between ram and level of fluid in reservoir.
- Check the valve size selection by determining pressure in cylinder during prefill for the following: $P_{abs} = P_{atm} + P_H - P_V - P_L$.

Where: –

See figures 1 or 2 or 3.

$P_H$ = Pressure due to head = 0.37 psi/ft x "H" (assuming a fluid specific gravity of 0.87).

See the Pressure Drop vs Flow chart for the valve involved.

$P_V$ = Pressure drop through the prefill valve.

See figure 1 through 3 with reference to the Line Head Loss vs Flow for the pipe size involved.

$P_L$ = Pressure drop due to line loss and elbows

For special installation or assistance in valve selection, consult your Oilgear representative.

CONVERSIONS

PSI ÷ 14.5 = bar
USGPM x 3.79 = liters/min.
Inches$^2$ x 645.16 = mm$^2$
Inches$^3$ x 16.39 = cm$^3$
feet/sec. x 0.305 = m/sec.

## FLOW/VELOCITY IN SCHEDULE 40 PIPES

| NOM. Pipe Size | Bore in. | 4 fps USgpm | 1,2 mps lpm | 8 fps USgpm | 2,4 mps lpm | 12 fps USgpm | 3,6 mps lpm | 16 fps USgpm | 4,8 mps lpm |
|---|---|---|---|---|---|---|---|---|---|
| 3 | 3.07 | 92 | 344 | 184 | 688 | 276 | 1032 | 368 | 1376 |
| 4 | 4.03 | 159 | 593 | 317 | 1186 | 476 | 1780 | 635 | 2372 |
| 6 | 6.06 | 360 | 1341 | 720 | 2682 | 1080 | 4023 | 1441 | 5365 |
| 8 | 7.98 | 624 | 2325 | 1247 | 4650 | 1871 | 6977 | 2495 | 9303 |
| 10 | 10.02 | 983 | 3666 | 1966 | 7333 | 2949 | 11000 | 3933 | 14666 |
| 12 | 11.94 | 1396 | 5206 | 2791 | 10413 | 4187 | 15620 | 5582 | 20827 |
| 14 | 13.12 | 1687 | 6286 | 3373 | 12574 | 5060 | 18860 | 6747 | 25148 |
| 16 | 15.00 | 2203 | 8217 | 4406 | 16435 | 6609 | 24653 | 8812 | 32870 |

| | VALVE SIZE | PIPE TO RESERVOIR |
|---|---|---|
| | mm | in. |
| VPE | 40 | 1.5 |
| | 50 | 2 |
| | 65 | 2.5 |
| | 90 | 4 |
| | 130 | 7 |
| | 190 | 10 |
| | 250 | 12 |
| | 300 | 16 |
| VSA | 100 | 5 |
| | 150 | 8 |
| | 200 | 10 |
| | 250 | 12 |
| VSM | 75 | 3 |
| | 100 | 4 |
| | 150 | 6 |
| | 200 | 8 |
| | 250 | 10 |
| | 300 | 12 |
| | 350 | 16 |
| | 400 | 18 |

*For valves with internal decompression consult the factory for specifications.

IN TANK MOUNTED $P_L$ DOES NOT APPLY.

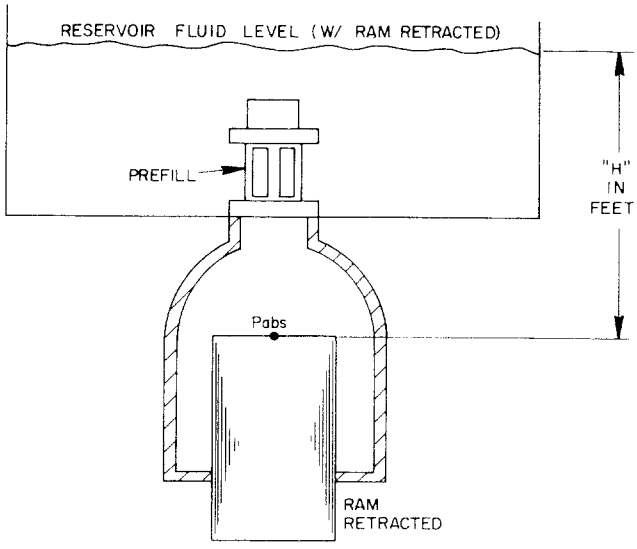


**Fig. 1** Prefill installed in reservoir and directly connected to cylinder.

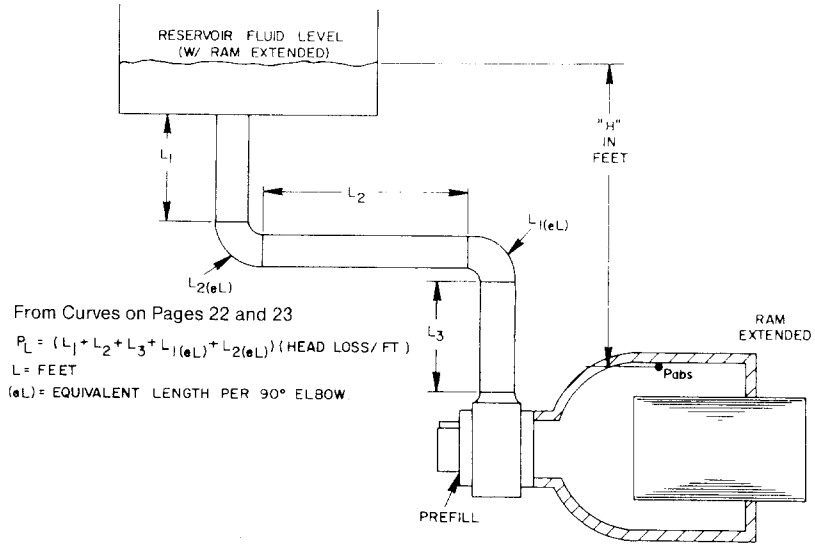


From Curves on Pages 22 and 23

$P_L = (L_1 + L_2 + L_3 + L_{1(eL)} + L_{2(eL)})$ (HEAD LOSS / FT)

L = FEET

(eL) = EQUIVALENT LENGTH PER 90° ELBOW

**Fig. 2** Prefill mounted on cylinder and connected to bottom of reservoir.

From Curves on Pages 22 and 23

$P_L = (L_1 + L_2 + L_{1(eL)})$ (HEAD LOSS / FT.)

L = FEET

(eL) = EQUIVALENT LENGTH OF PIPE PER 90° ELBOW

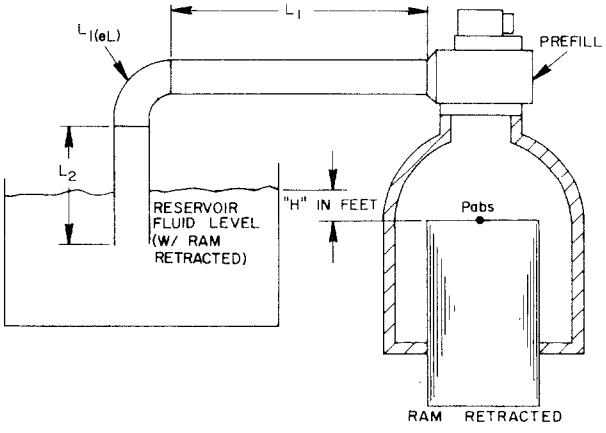


**Fig. 3** Prefill mounted on cylinder and connected to top of reservoir.

# APPLICATION GUIDE LINES

## PRESSURE LOSS VS. FLOW PER FOOT OF PIPE

### 1.5″ PIPE

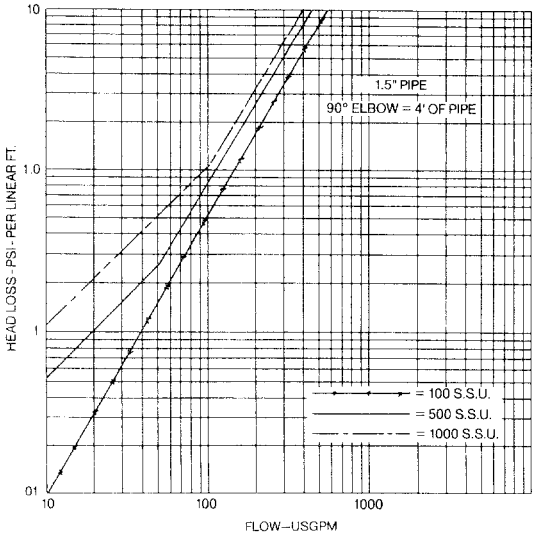


### 2″ PIPE

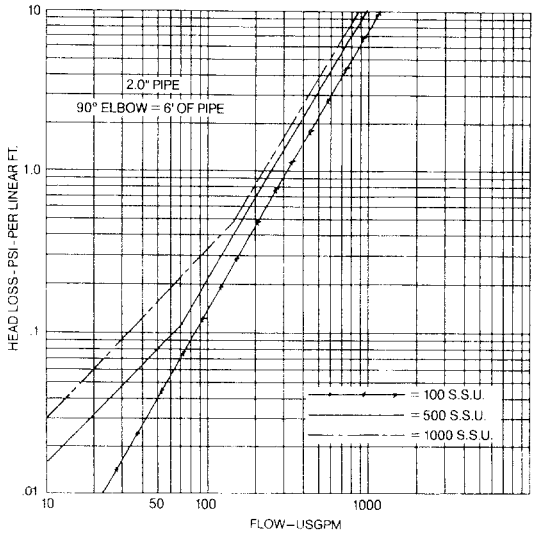


### 2.5″ PIPE

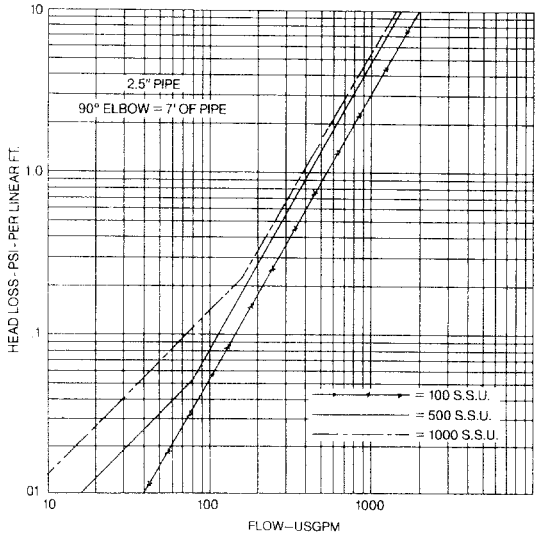


### 3.5″ PIPE

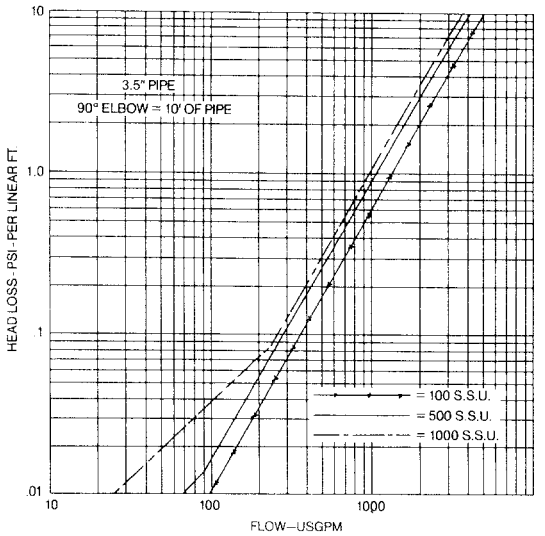


### 4″ PIPE

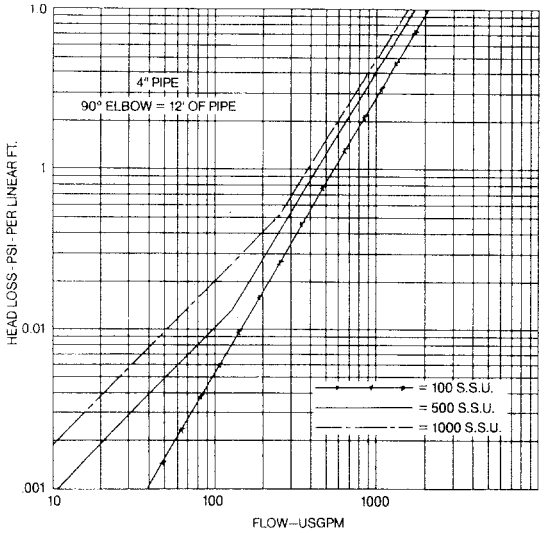


### 5″ PIPE

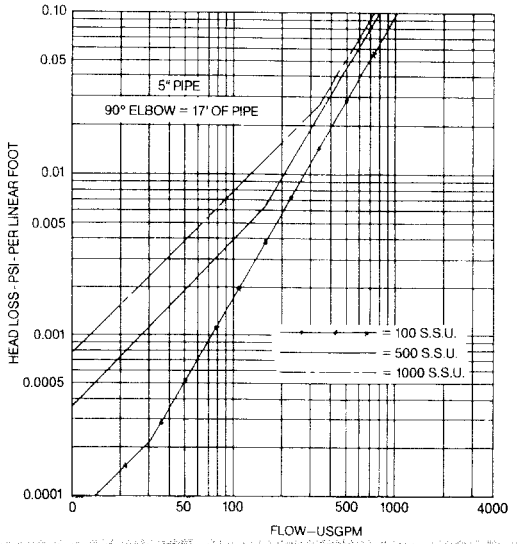

## 6" PIPE

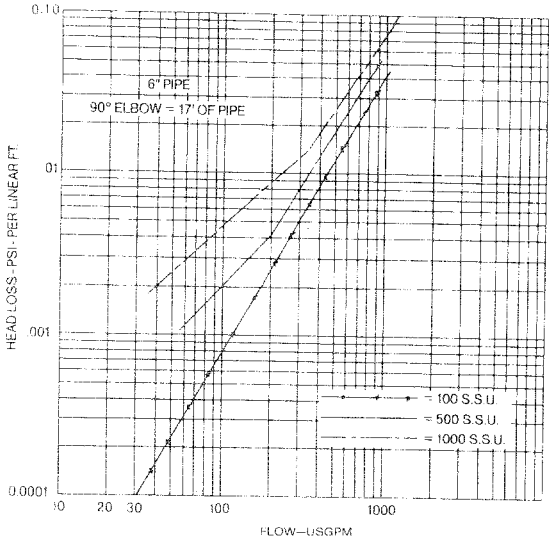


## 8" PIPE

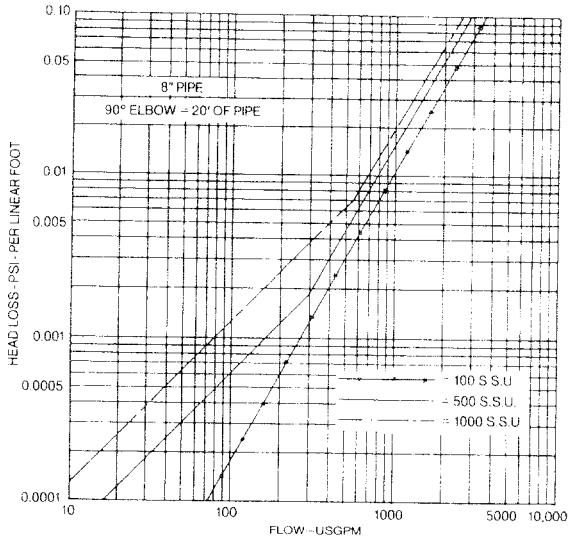


## 10" PIPE

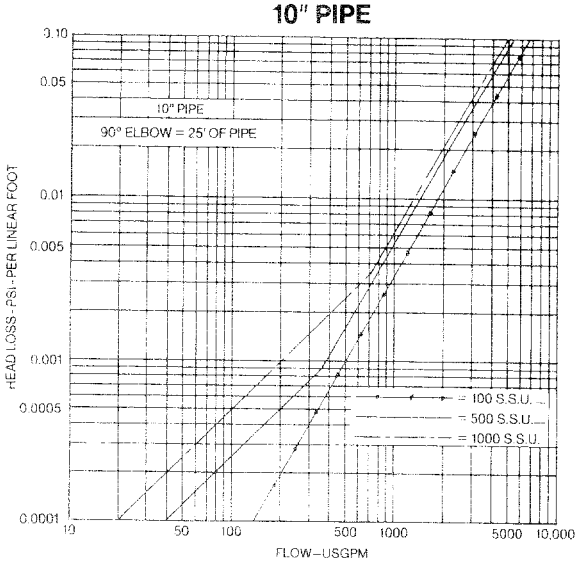


## 12" PIPE

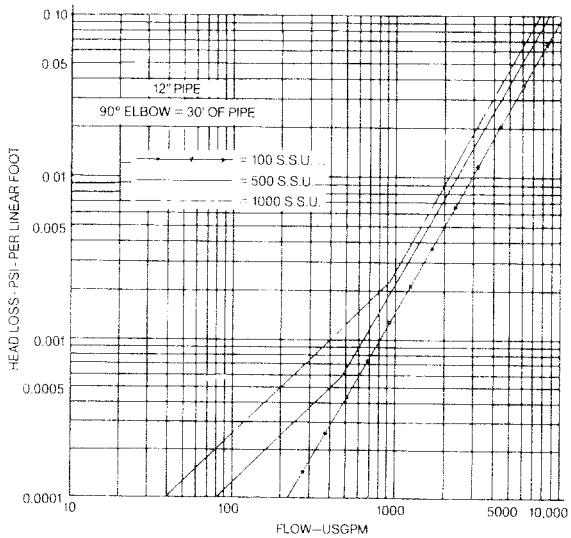


## 16" PIPE

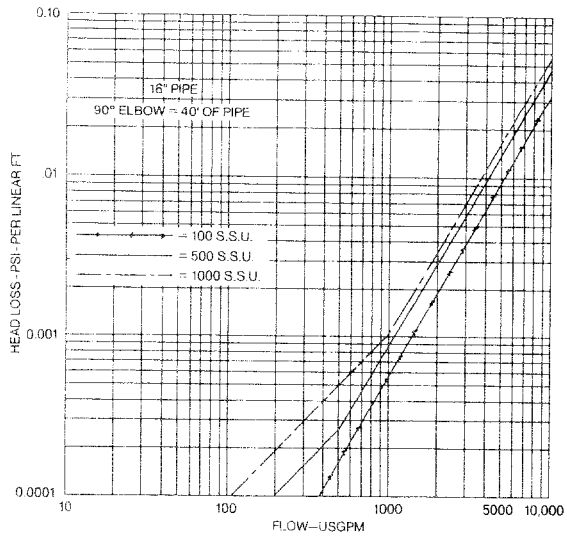


## 18" PIPE

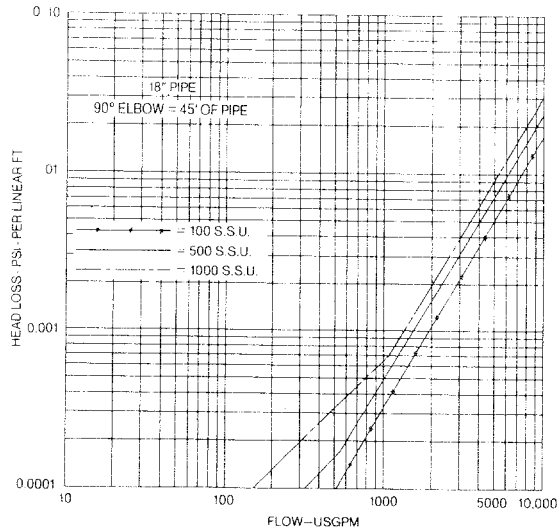

# Oilgear

2300 South 51st St., Milwaukee, WI USA 53219
Phone: 414-327-1700, Fax: 414-327-0532
internet: http://www.oilgear.com

**AUSTRALIA**
Oilgear Towler Australia Pty. Ltd.

**CANADA**
Oilgear Canada Inc.

**FRANCE**
Oilgear Towler S.A.

**GERMANY**
Oilgear Towler GmbH

**INDIA**
Oilgear Towler Polyhydron Pvt. Ltd.

**ITALY**
Oilgear Towler S.r.l.

**JAPAN**
The Oilgear Japan Company

**KOREA**
Oilgear Towler Korea Ltd.

**MEXICO**
Oilgear Mexicana S.A. de C.V.

**SPAIN**
Oilgear Towler S.A.

**UNITED KINGDOM**
Oilgear Towler Ltd.